Engineering data (WIN 1074)		
DC bus voltage	560	V DC
Nominal AC voltage	380	V AC (rms)
Rated voltage	274	V AC (rms)
Rated power	4.1	kW
Rated speed	3000	rpm
Rated torque	13.00	Nm
Rated current	10.96	A (rms)
Peak torque	51	Nm
Peak current	45.4	A (rms)
Stall torque	18	Nm
Stall current	12.2	A (rms)
No load speed	4260	rpm
EMF constant ±10%	89	V AC (rms) / 1000rpm
Theoretical torque constant ±10%	1.47	Nm / A (rms)
Torque constant ±10% @ rated load	1.19	Nm / A (rms)
Number of poles	10	
Electrical time constant	11.61	ms
Winding terminal resistance	0.62	Ω
Rotary field terminal inductance	7.2	mH

Customs info	
HS Code	85015220

Mechanical data (setting 48)		
Max mechanical speed	6000	rpm
Mech. time constant	0.92	ms
Thermal time constant	42	min
Rotor inertia	18.5	kgcm²
Protection	IP64	
Color	RAL 9005	
Cooling	Convection	
Motor-only mass	9.2	kg
Max. axial force 20kh	121	N
Max. radial force 20kh*	637	N
Max. axial force 100kh	71	N
Max. radial force 100kh*	373	N

** Defined for point of action at ½ output shaft length*

Sensors	
Temperature	PT1000 {PT1000}
Feedback	EKS36 (HDSL) single-turn, 17 bits

Torque / speed curve

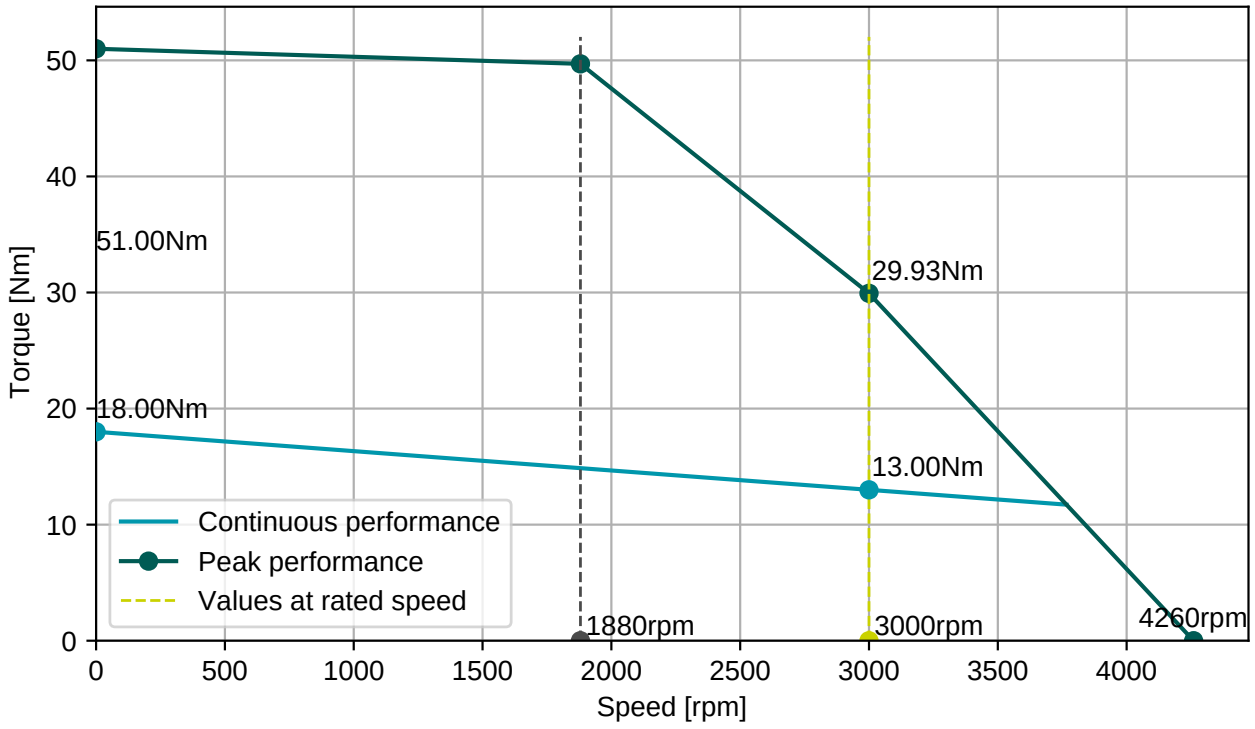

BGC110N00001216000

M23, 8 poles, rotary

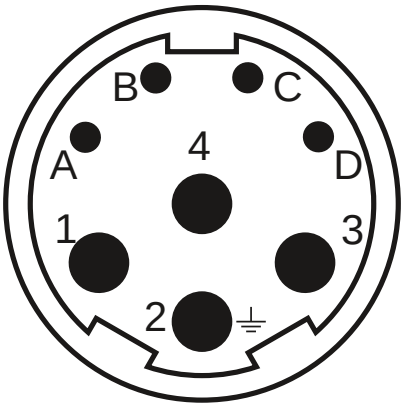

Connector 1 (283)	
1	U
4	V
3	W
2	PE
A	Brake+
B	Brake-
C	GND/DSL-
D	+Us/DSL+

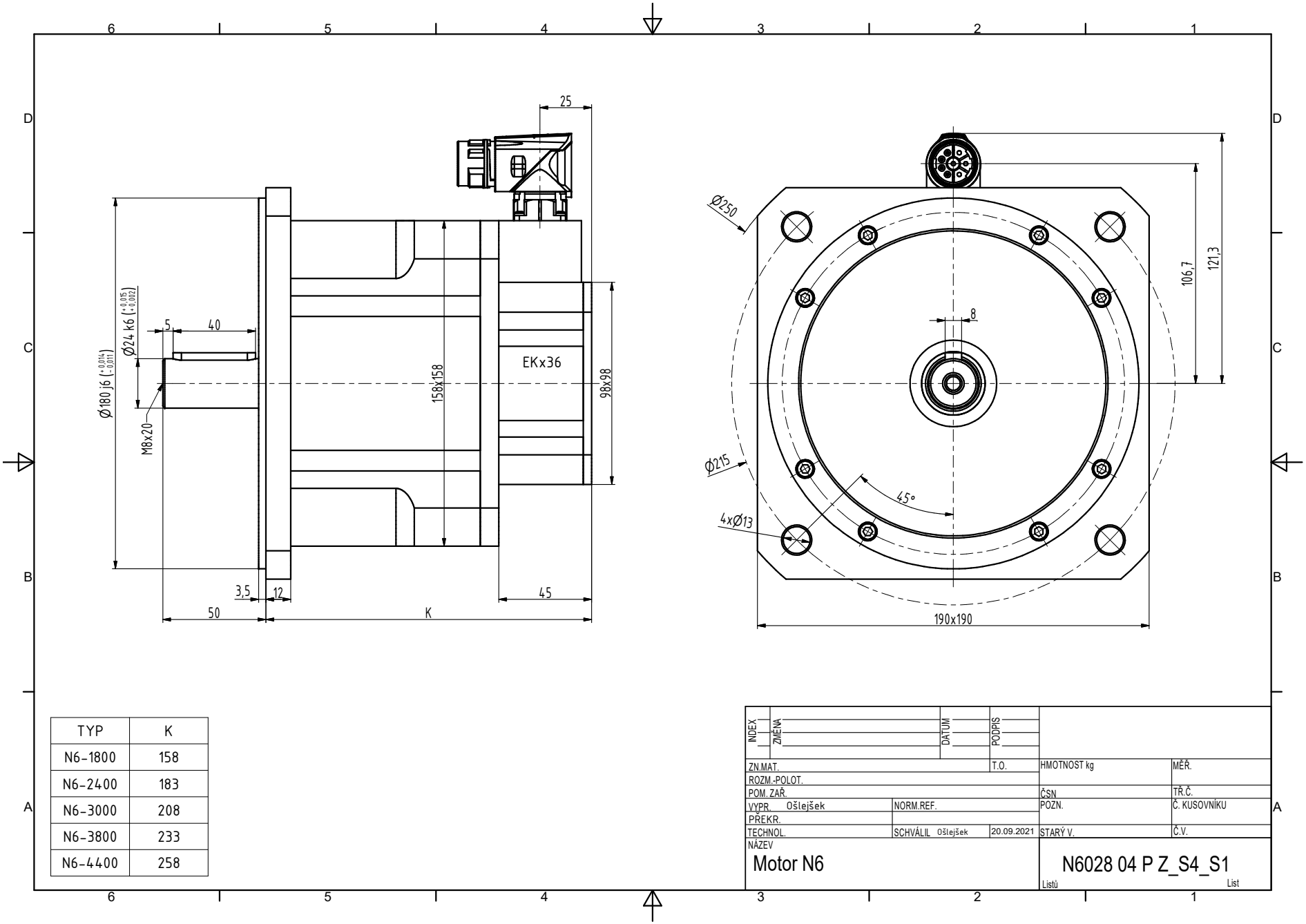

TYP	K
N6-1800	158
N6-2400	183
N6-3000	208
N6-3800	233
N6-4400	258

INDEX	ZMĚNA	DATUM	PODPIS

ZN.MAT.		T.O.	HMOTNOST kg / MĚŘ.
ROZM.-POLOT.			
POM. ZAŘ.			ČSN / TŘ.Č.
VYPR. Ošlejšek	NORM.REF.		POZN. / Č. KUSOVNÍKU
PŘEKR.			
TECHNOL.	SCHVÁLIL Ošlejšek	20.09.2021	STARÝ V. / Č.V.

NÁZEV
Motor N6

N6028 04 P Z_S4_S1

Listů List