Engineering data (WIN 880)		
DC bus voltage	560	V DC
Nominal AC voltage	380	V AC (rms)
Rated voltage	274	V AC (rms)
Rated power	4.2	kW
Rated speed	2000	rpm
Rated torque	20.00	Nm
Rated current	10.66	A (rms)
Peak torque	72	Nm
Peak current	42.3	A (rms)
Stall torque	24	Nm
Stall current	10.8	A (rms)
No load speed	2830	rpm
EMF constant ±10%	134	V AC (rms) / 1000rpm
Theoretical torque constant ±10%	2.22	Nm / A (rms)
Torque constant ±10% @ rated load	1.88	Nm / A (rms)
Number of poles	10	
Electrical time constant	13.33	ms
Winding terminal resistance	0.81	Ω
Rotary field terminal inductance	10.8	mH

Customs info	
HS Code	85015220

Mechanical data (setting 48)		
Max mechanical speed	6000	rpm
Mech. time constant	0.73	ms
Thermal time constant	47	min
Rotor inertia	25.6	kgcm²
Protection	IP64	
Color	RAL 9005	
Cooling	Convection	
Motor-only mass	18.3	kg
Max. axial force 20kh	156	N
Max. radial force 20kh	822	N*
Max. axial force 100kh	91	N
Max. radial force 100kh	480	N*

** Defined for point of action at ½ output shaft length*

Sensors	
Temperature	PT1000 {PT1000}
Feedback	EKS36 (HDSL) single-turn, 18 bits, SIL2

Brake		
Braking torque	36.00	Nm
Voltage	24	V DC
Power @20°C	26.0	W
Current @20°C	1.08	A
Inertia	6.20	kgcm²
Mass	2.85	kg

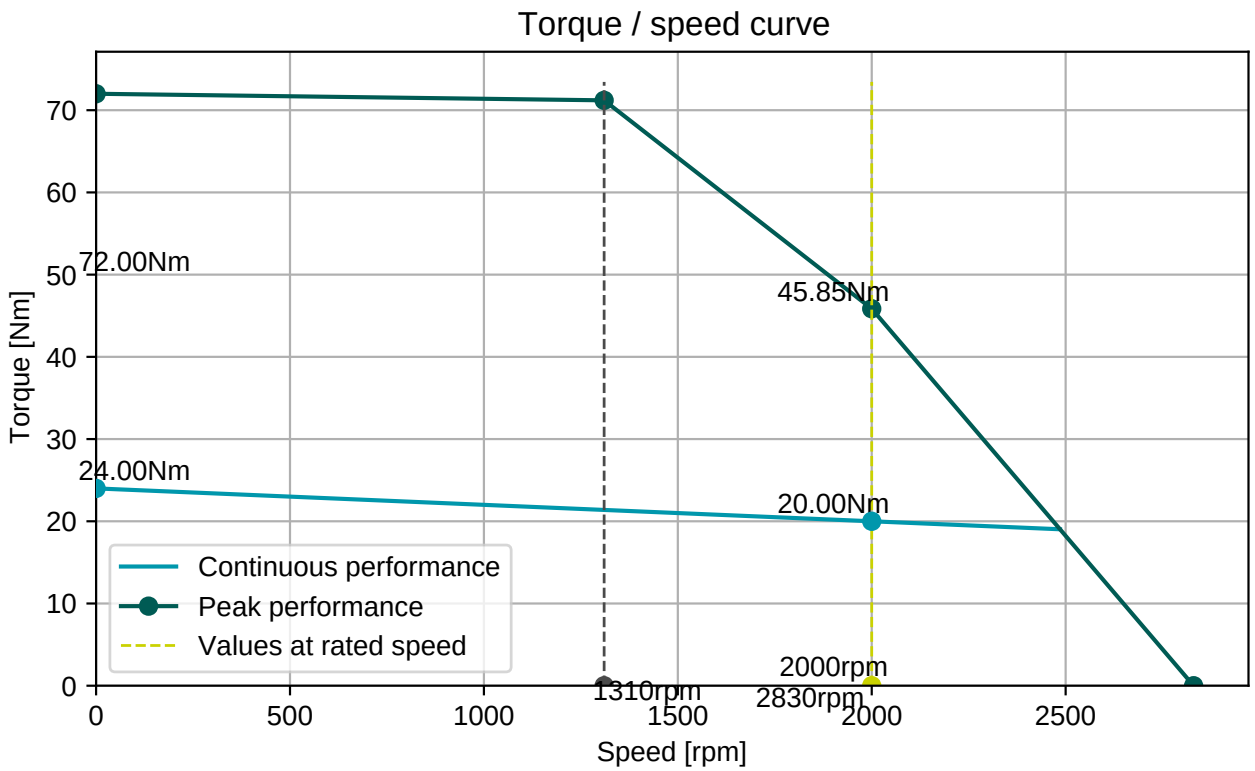

BGC110N00001216000

M23, 8 poles, rotary

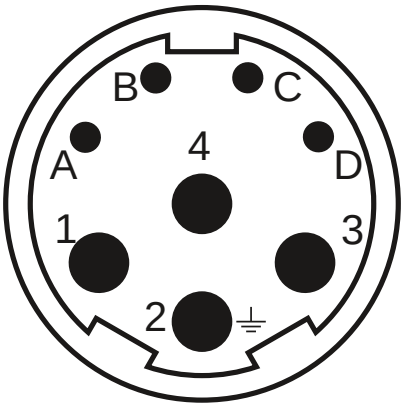

Connector 1 (283)	
1	U
4	V
3	W
2	PE
A	Brake+
B	Brake-
C	GND/DSL-
D	+Us/DSL+

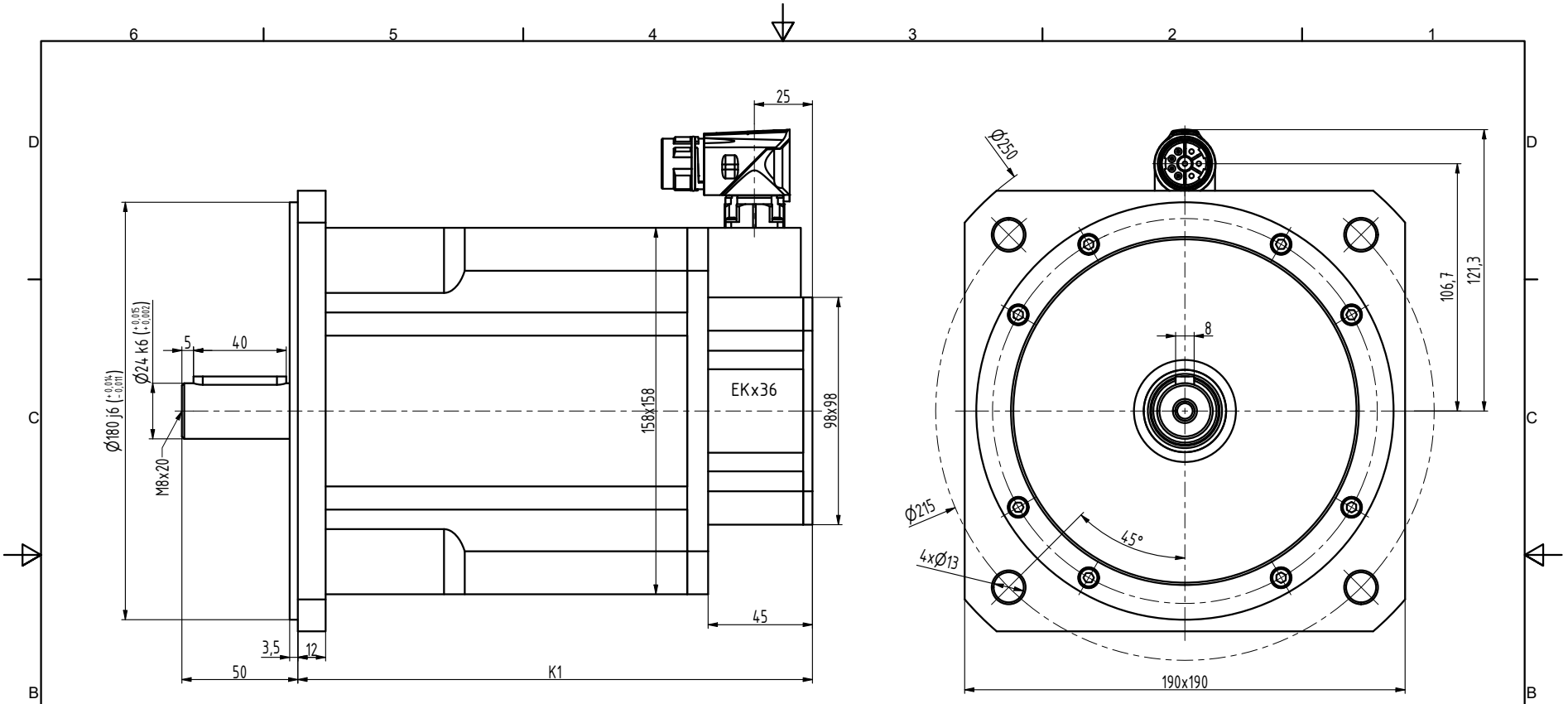

TYP	K1
N6-1800	222
N6-2400	247
N6-3000	272
N6-3800	297
N6-4400	322

INDEX	ZMĚNA	DATUM	PODPIS		
ZN.MAT.		T.O.		HMOTNOST kg	MĚŘ.
ROZM.-POLOT.					
POM. ZAŘ.				ČSN	TŘ.Č.
VYPR. Ošlejšek	NORM.REF.			POZN.	Č. KUSOVNÍKU
PŘEKR.					
TECHNOL.	SCHVÁLIL Ošlejšek	20.09.2021		STARÝ V.	Č.V.
NÁZEV Motor N6				N6028 04 BP Z_S4_S1	
				Listů	List