Engineering data (WIN 993)		
DC bus voltage	560	V DC
Nominal AC voltage	380	V AC (rms)
Rated voltage	284	V AC (rms)
Rated power	6.6	kW
Rated speed	3000	rpm
Rated torque	21.00	Nm
Rated current	16.19	A (rms)
Peak torque	90	Nm
Peak current	63.9	A (rms)
Stall torque	30	Nm
Stall current	17.8	A (rms)
No load speed	3720	rpm
EMF constant ±10%	102	V AC (rms) / 1000rpm
Theoretical torque constant ±10%	1.69	Nm / A (rms)
Torque constant ±10% @ rated load	1.30	Nm / A (rms)
Number of poles	10	
Electrical time constant	14.24	ms
Winding terminal resistance	0.33	Ω
Rotary field terminal inductance	4.7	mH

Customs info	
HS Code	85015220

Mechanical data (setting 48)		
Max mechanical speed	6000	rpm
Mech. time constant	0.66	ms
Thermal time constant	52	min
Rotor inertia	32.7	kgcm²
Protection	IP64	
Color	RAL 9005	
Cooling	Convection	
Motor-only mass	18	kg
Max. axial force 20kh	139	N
Max. radial force 20kh*	733	N
Max. axial force 100kh	81	N
Max. radial force 100kh*	429	N

** Defined for point of action at ½ output shaft length*

Sensors	
Temperature	PT1000 {PT1000}
Feedback	EKM36 (HDSL) multi-turn, 18+12 bits, SIL2

Brake		
Braking torque	36.00	Nm
Voltage	24	V DC
Power @20°C	26.0	W
Current @20°C	1.08	A
Inertia	6.20	kgcm²
Mass	2.85	kg

Torque / speed curve

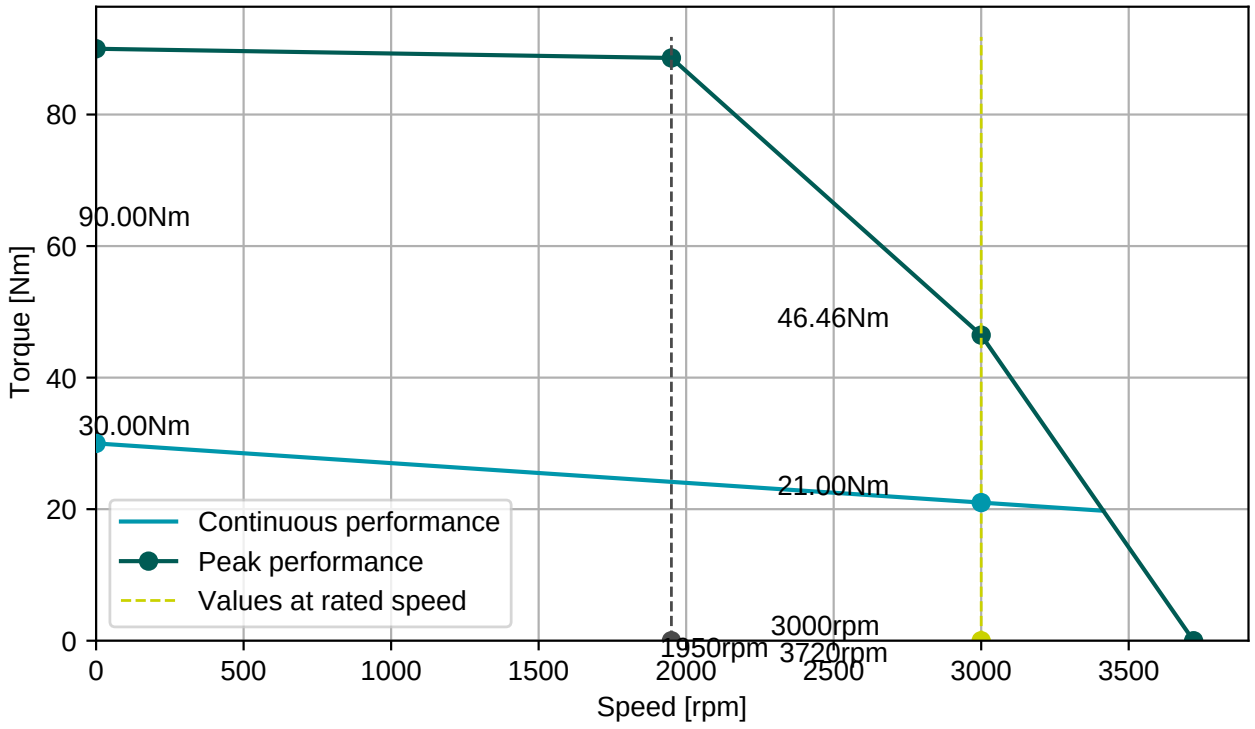

BGC110N00001216000

M23, 8 poles, rotary

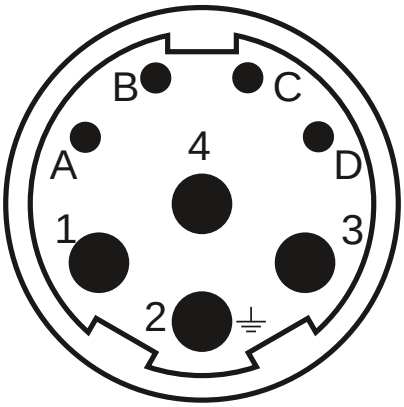

Connector 1 (283)	
1	U
4	V
3	W
2	PE
A	Brake+
B	Brake-
C	GND/DSL-
D	+Us/DSL+

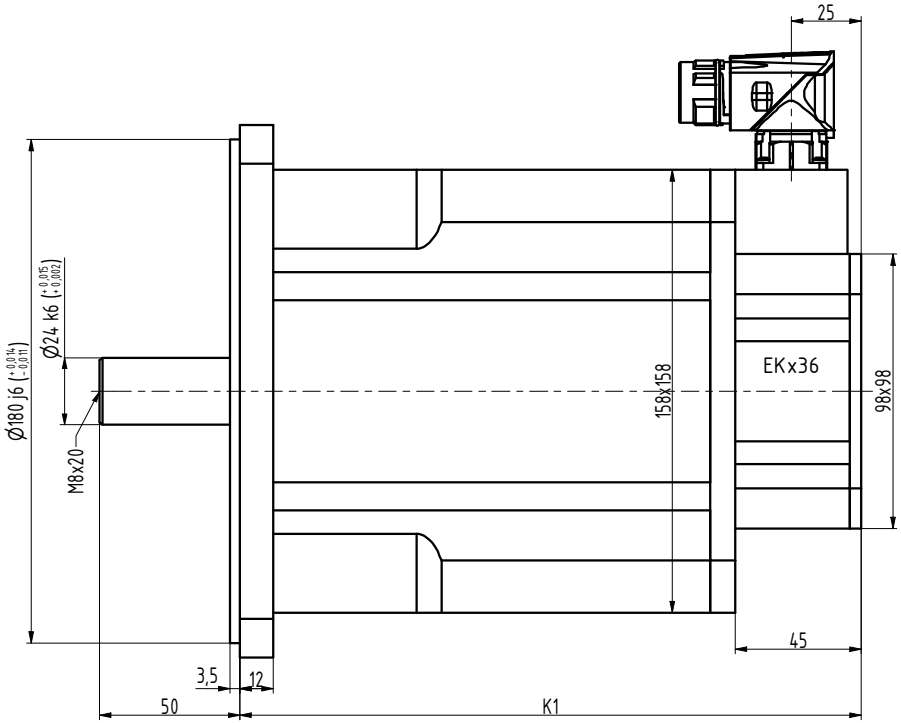

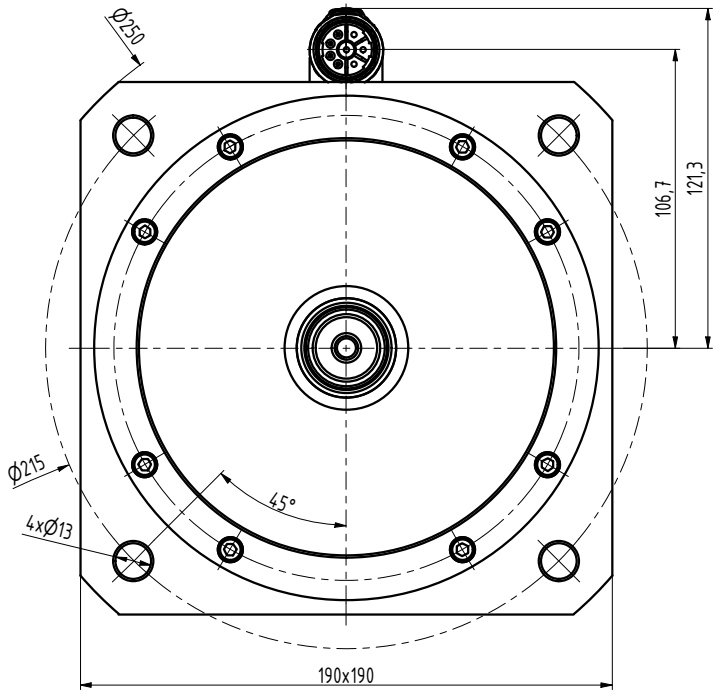

TYP	K1
N6-1800	222
N6-2400	247
N6-3000	272
N6-3800	297
N6-4400	322

INDEX	ZMĚNA	DATUM	PODPIS

ZN.MAT.			T.O.	HMOTNOST kg	MĚŘ.
ROZM.-POLOT.					
POM. ZAŘ.				ČSN	TŘ.Č.
VYPR. Ošlejšek	NORM.REF.			POZN.	Č. KUSOVNÍKU
PŘEKR.					
TECHNOL.	SCHVÁLIL Ošlejšek	20.09.2021		STARÝ V.	Č.V.

NÁZEV
Motor N6

N6028 04 B Z_S4_S1

Listů List