| Engineering data (WIN 993) | | |
|---|---|---|
| DC bus voltage | 560 | V DC |
| Nominal AC voltage | 380 | V AC (rms) |
| Rated voltage | 284 | V AC (rms) |
| Rated power | 6.6 | kW |
| Rated speed | 3000 | rpm |
| Rated torque | 21.00 | Nm |
| Rated current | 16.19 | A (rms) |
| Peak torque | 90 | Nm |
| Peak current | 63.9 | A (rms) |
| Stall torque | 30 | Nm |
| Stall current | 17.8 | A (rms) |
| No load speed | 3720 | rpm |
| EMF constant ±10% | 102 | V AC (rms) / 1000rpm |
| Theoretical torque constant ±10% | 1.69 | Nm / A (rms) |
| Torque constant ±10% @ rated load | 1.30 | Nm / A (rms) |
| Number of poles | 10 | |
| Electrical time constant | 14.24 | ms |
| Winding terminal resistance | 0.33 | Ω |
| Rotary field terminal inductance | 4.7 | mH |

| Customs info | |
|---|---|
| HS Code | 85015220 |

| Mechanical data (setting 48) | | |
|---|---|---|
| Max mechanical speed | 6000 | rpm |
| Mech. time constant | 0.66 | ms |
| Thermal time constant | 52 | min |
| Rotor inertia | 32.7 | kgcm² |
| Protection | IP64 | |
| Color | RAL 9005 | |
| Cooling | Convection | |
| Motor-only mass | 18 | kg |
| Max. axial force 20kh | 139 | N |
| Max. radial force 20kh* | 733 | N |
| Max. axial force 100kh | 81 | N |
| Max. radial force 100kh* | 429 | N |

** Defined for point of action at ½ output shaft length*

| Sensors | |
|---|---|
| Temperature | PT1000 {PT1000} |
| Feedback | EDS35 (HDSL) single-turn, 24 bits |

| Brake | | |
|---|---|---|
| Braking torque | 36.00 | Nm |
| Voltage | 24 | V DC |
| Power @20°C | 26.0 | W |
| Current @20°C | 1.08 | A |
| Inertia | 6.20 | kgcm² |
| Mass | 2.85 | kg |

Torque / speed curve

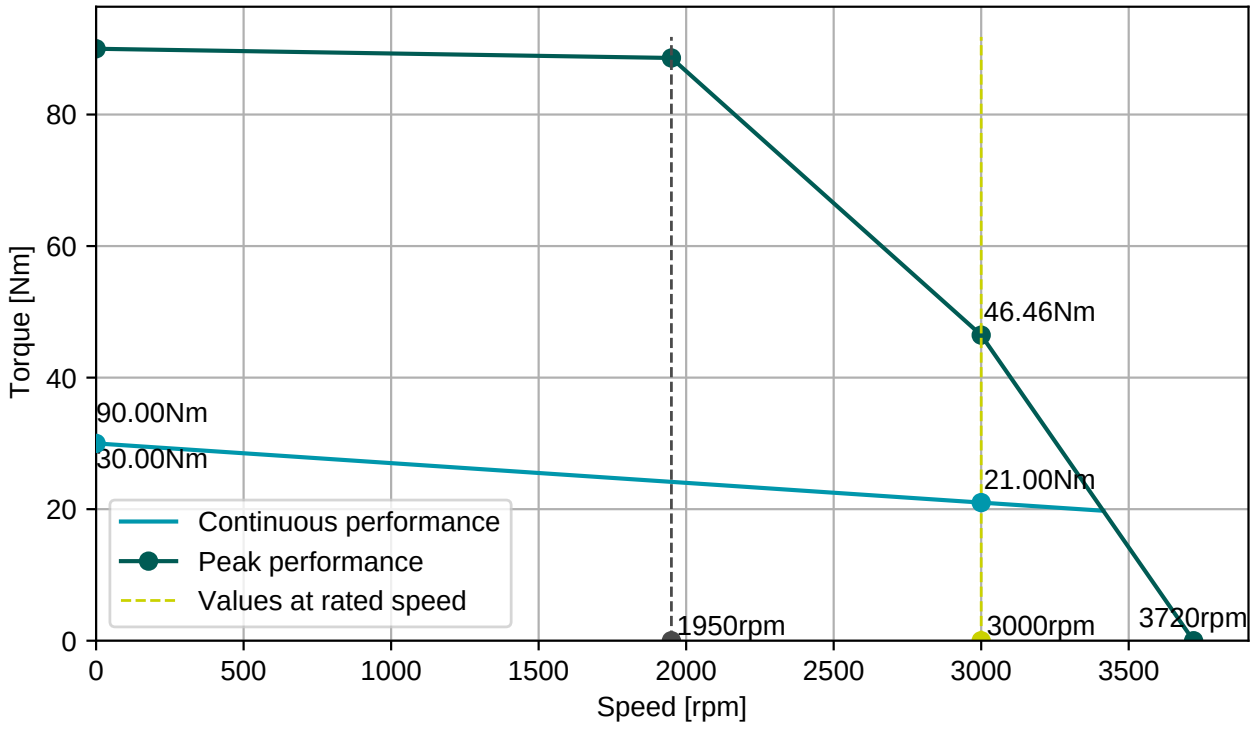


**BGC110N00001216000**

M23, 8 poles, rotary

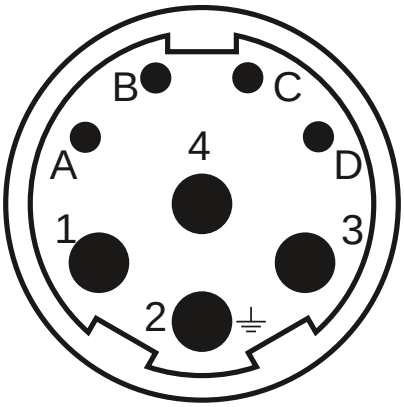


| Connector 1 (283) | |
|---|---|
| **1** | U |
| **4** | V |
| **3** | W |
| **2** | PE |
| **A** | Brake+ |
| **B** | Brake- |
| **C** | GND/DSL- |
| **D** | +Us/DSL+ |

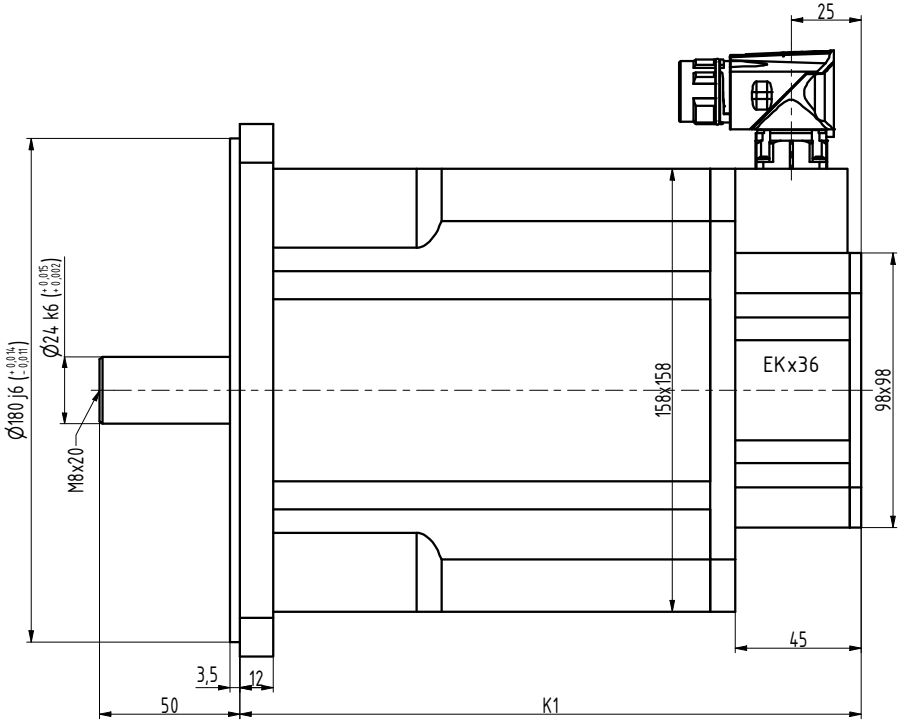


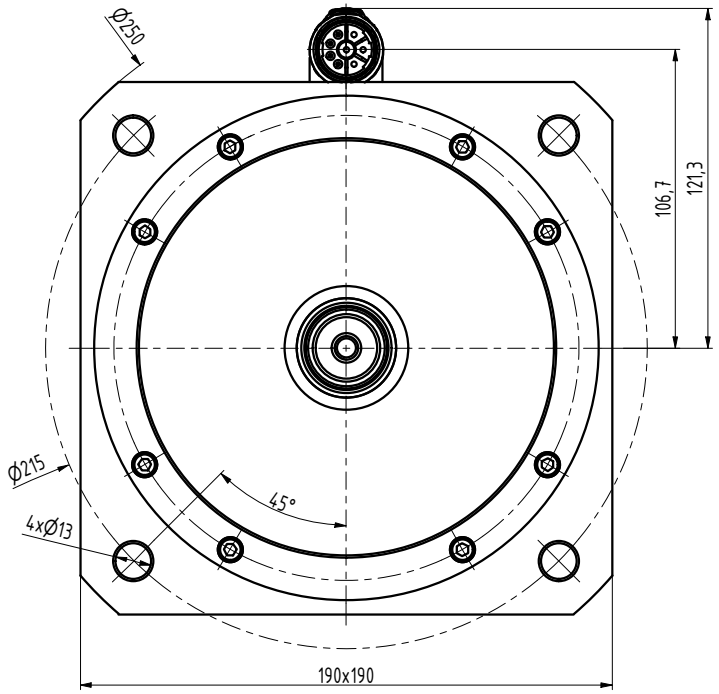


| TYP | K1 |
|---|---|
| N6-1800 | 222 |
| N6-2400 | 247 |
| N6-3000 | 272 |
| N6-3800 | 297 |
| N6-4400 | 322 |

| INDEX | ZMĚNA | DATUM | PODPIS |
|---|---|---|---|
| | | | |

| | | | | | |
|---|---|---|---|---|---|
| ZN.MAT. | | | T.O. | HMOTNOST kg | MĚŘ. |
| ROZM.-POLOT. | | | | | |
| POM. ZAŘ. | | | | ČSN | TŘ.Č. |
| VYPR. Ošlejšek | NORM.REF. | | | POZN. | Č. KUSOVNÍKU |
| PŘEKR. | | | | | |
| TECHNOL. | SCHVÁLIL Ošlejšek | 20.09.2021 | | STARÝ V. | Č.V. |

NÁZEV
Motor N6

N6028 04 B Z_S4_S1

Listů List