Engineering data (WIN 993)		
DC bus voltage	560	V DC
Nominal AC voltage	380	V AC (rms)
Rated voltage	284	V AC (rms)
Rated power	6.6	kW
Rated speed	3000	rpm
Rated torque	21.00	Nm
Rated current	16.19	A (rms)
Peak torque	90	Nm
Peak current	63.9	A (rms)
Stall torque	30	Nm
Stall current	17.8	A (rms)
No load speed	3720	rpm
EMF constant ±10%	102	V AC (rms) / 1000rpm
Theoretical torque constant ±10%	1.69	Nm / A (rms)
Torque constant ±10% @ rated load	1.30	Nm / A (rms)
Number of poles	10	
Electrical time constant	14.24	ms
Winding terminal resistance	0.33	Ω
Rotary field terminal inductance	4.7	mH

Customs info	
HS Code	85015220

Mechanical data (setting 48)		
Max mechanical speed	6000	rpm
Mech. time constant	0.66	ms
Thermal time constant	52	min
Rotor inertia	32.7	kgcm²
Protection	IP64	
Color	RAL 9005	
Cooling	Convection	
Motor-only mass	9.2	kg
Max. axial force 20kh	136	N
Max. radial force 20kh*	717	N
Max. axial force 100kh	80	N
Max. radial force 100kh*	419	N

** Defined for point of action at ½ output shaft length*

Sensors	
Temperature	PT1000 {PT1000}
Feedback	EDM35 (HDSL) multi-turn, 20+12 bits

Torque / speed curve

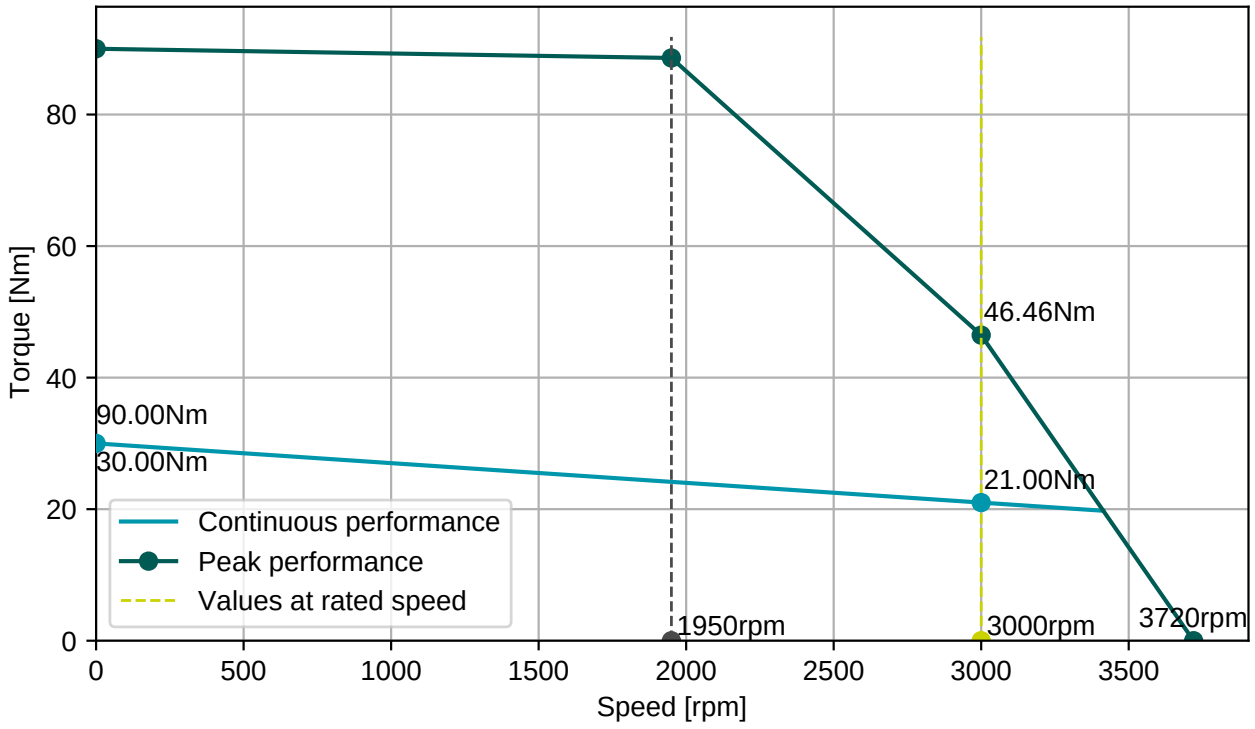

BGC110N00001216000

M23, 8 poles, rotary

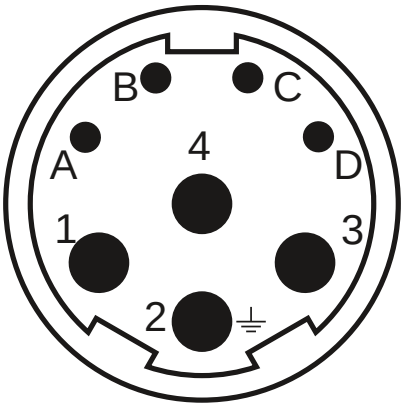

Connector 1 (283)	
1	U
4	V
3	W
2	PE
A	Brake+
B	Brake-
C	GND/DSL-
D	+Us/DSL+

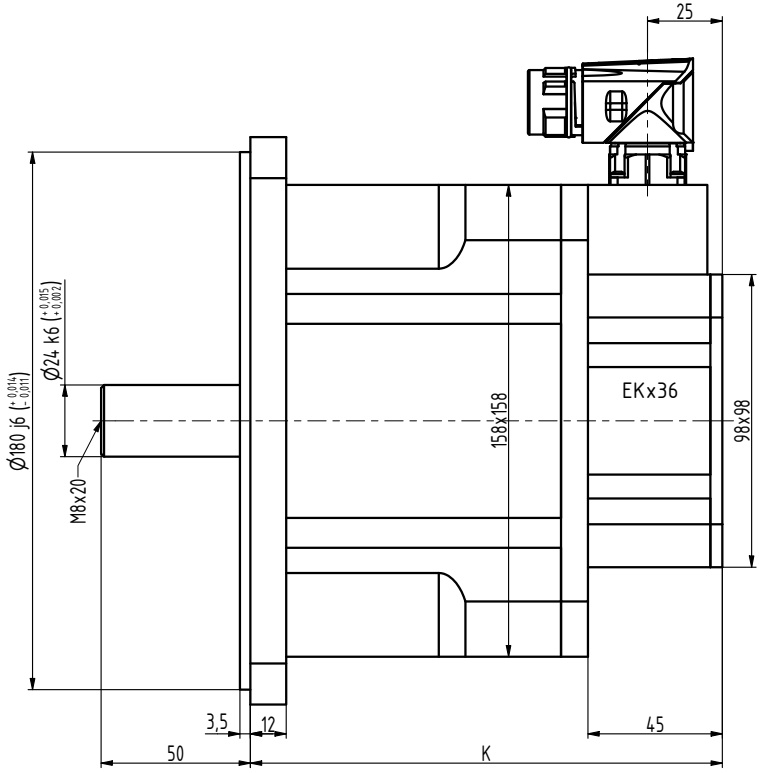

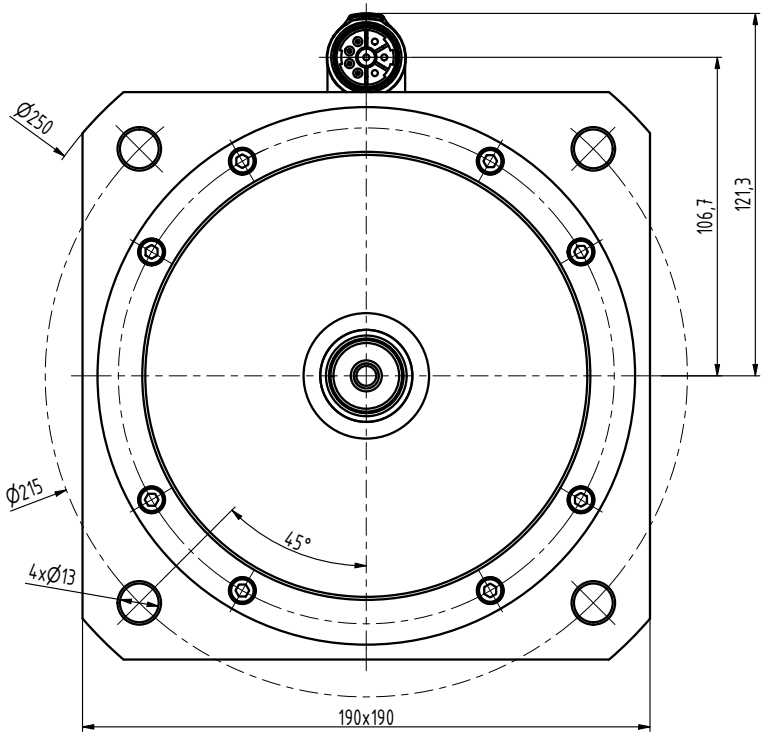

TYP	K
N6-1800	158
N6-2400	183
N6-3000	208
N6-3800	233
N6-4400	258

INDEX	ZMĚNA	DATUM	PODPIS		
ZN.MAT.			T.O.	HMOTNOST kg	MĚŘ.
ROZM.-POLOT.					
POM. ZAŘ.				ČSN	TŘ.Č.
VYPR. Ošlejšek		NORM.REF.		POZN.	Č. KUSOVNÍKU
PŘEKR.					
TECHNOL.		SCHVÁLIL Ošlejšek	19.09.2021	STARÝ V.	Č.V.
NÁZEV	Motor N6			N6028 04 Z_S4_S1	
				Listů	List