Engineering data (WIN 730)		
DC bus voltage	320	V DC
Nominal AC voltage	220	V AC (rms)
Rated voltage	166	V AC (rms)
Rated power	3.1	kW
Rated speed	2000	rpm
Rated torque	14.60	Nm
Rated current	12.59	A (rms)
Peak torque	48	Nm
Peak current	44.3	A (rms)
Stall torque	16	Nm
Stall current	12.6	A (rms)
No load speed	2850	rpm
EMF constant ±10%	77	V AC (rms) / 1000rpm
Theoretical torque constant ±10%	1.27	Nm / A (rms)
Torque constant ±10% @ rated load	1.16	Nm / A (rms)
Number of poles	10	
Electrical time constant	8.60	ms
Winding terminal resistance	0.57	Ω
Rotary field terminal inductance	4.9	mH

Customs info	
HS Code	85015220

Mechanical data (setting 48)		
Max mechanical speed	9000	rpm
Mech. time constant	0.70	ms
Thermal time constant	55	min
Rotor inertia	11.5	kgcm²
Protection	IP64	
Color	RAL 9005	
Cooling	Convection	
Motor-only mass	11.2	kg
Max. axial force 20kh	157	N
Max. radial force 20kh	829	N*
Max. axial force 100kh	92	N
Max. radial force 100kh	485	N*

** Defined for point of action at ½ output shaft length*

Sensors	
Temperature	PT1000 {PT1000}
Feedback	EDS35 (HDSL) single-turn, 24 bits

Brake		
Braking torque	18.00	Nm
Voltage	24	V DC
Power @20°C	24.0	W
Current @20°C	1.00	A
Inertia	2.00	kgcm²
Mass	1.80	kg

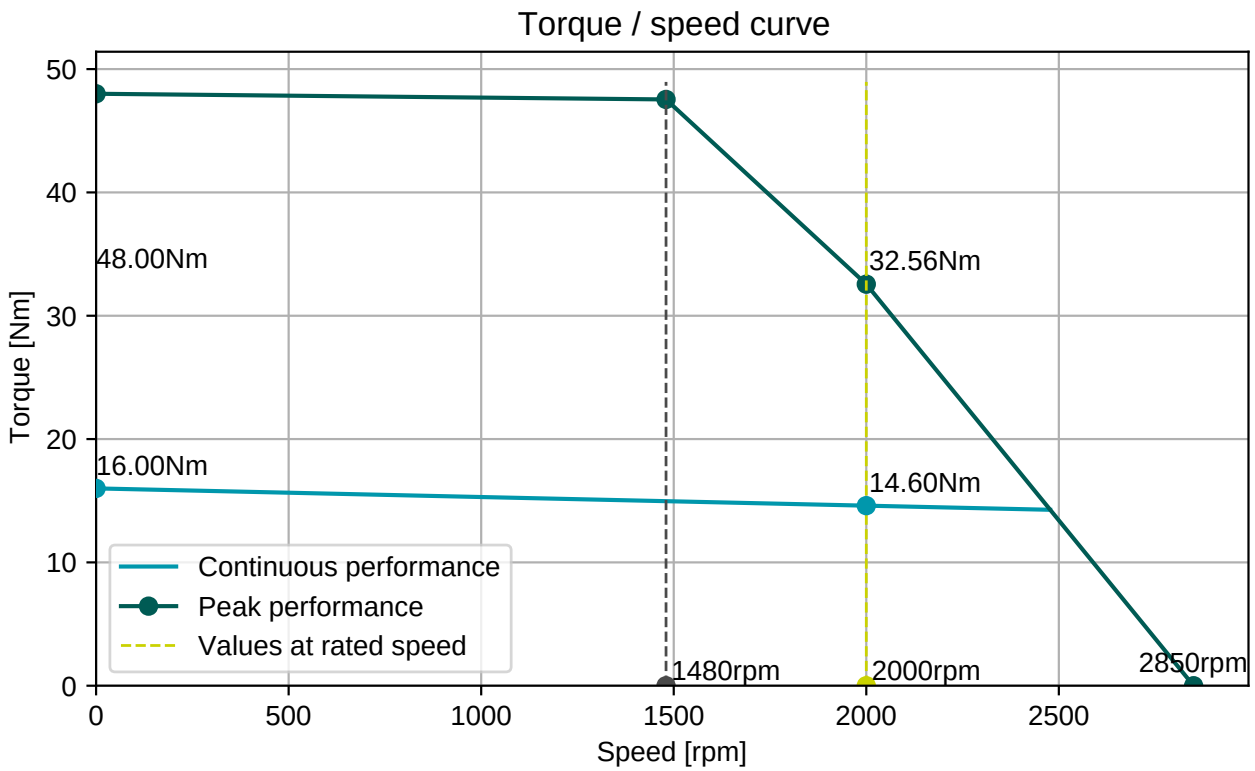

BGC110N00001216000

M23, 8 poles, rotary

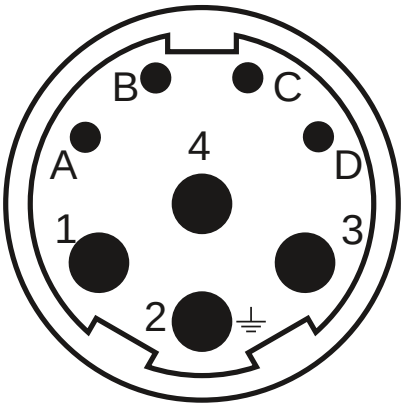

Connector 1 (283)	
1	U
4	V
3	W
2	PE
A	Brake+
B	Brake-
C	GND/DSL-
D	+Us/DSL+

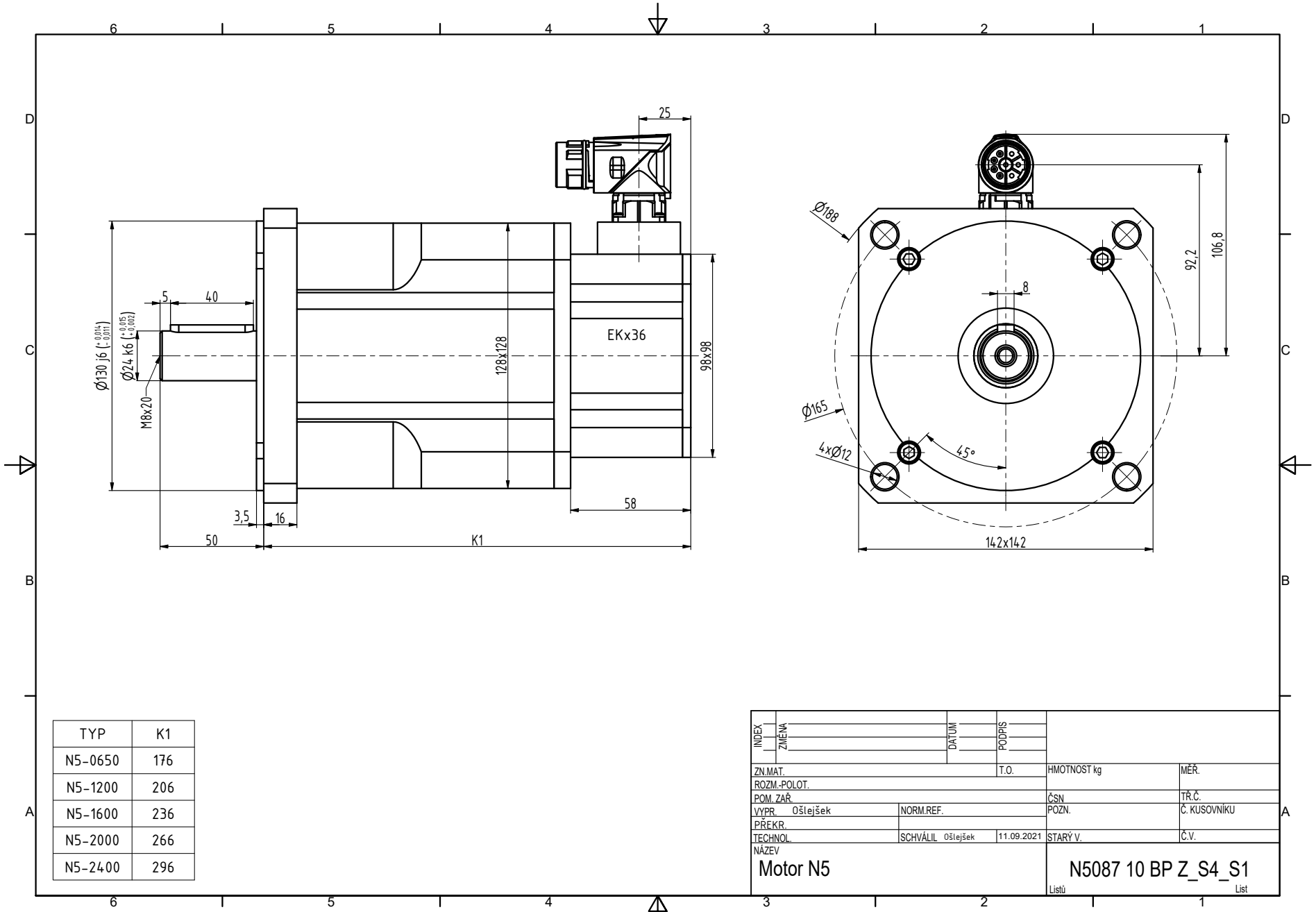

TYP	K1
N5-0650	176
N5-1200	206
N5-1600	236
N5-2000	266
N5-2400	296

INDEX	ZMĚNA	DATUM	PODPIS		
ZN.MAT.		T.O.		HMOTNOST kg	MĚŘ.
ROZM.-POLOT.					
POM. ZAŘ.				ČSN	TŘ.Č.
VYPR. Ošlejšek	NORM.REF.			POZN.	Č. KUSOVNÍKU
PŘEKR.					
TECHNOL.	SCHVÁLIL Ošlejšek	11.09.2021		STARÝ V.	Č.V.
NÁZEV Motor N5				N5087 10 BP Z_S4_S1	
				Listů	List