| Engineering data (WIN 863) | | |
|---|---|---|
| DC bus voltage | 560 | V DC |
| Nominal AC voltage | 380 | V AC (rms) |
| Rated voltage | 296 | V AC (rms) |
| Rated power | 6.3 | kW |
| Rated speed | 3000 | rpm |
| Rated torque | 20.00 | Nm |
| Rated current | 14.35 | A (rms) |
| Peak torque | 72 | Nm |
| Peak current | 47.9 | A (rms) |
| Stall torque | 24 | Nm |
| Stall current | 14 | A (rms) |
| No load speed | 3650 | rpm |
| EMF constant ±10% | 104 | V AC (rms) / 1000rpm |
| Theoretical torque constant ±10% | 1.72 | Nm / A (rms) |
| Torque constant ±10% @ rated load | 1.39 | Nm / A (rms) |
| Number of poles | 10 | |
| Electrical time constant | 8.93 | ms |
| Winding terminal resistance | 0.56 | Ω |
| Rotary field terminal inductance | 5 | mH |

| Customs info | |
|---|---|
| HS Code | 85015220 |

| Mechanical data (setting 48) | | |
|---|---|---|
| Max mechanical speed | 9000 | rpm |
| Mech. time constant | 0.61 | ms |
| Thermal time constant | 75 | min |
| Rotor inertia | 18.7 | kgcm² |
| Protection | IP64 | |
| Color | RAL 9005 | |
| Cooling | Convection | |
| Motor-only mass | 11.2 | kg |
| Max. axial force 20kh | 146 | N |
| Max. radial force 20kh* | 770 | N |
| Max. axial force 100kh | 86 | N |
| Max. radial force 100kh* | 450 | N |

** Defined for point of action at ½ output shaft length*

| Sensors | |
|---|---|
| Temperature | PT1000 {PT1000} |
| Feedback | EKS36 (HDSL) single-turn, 18 bits, SIL2 |

Torque / speed curve

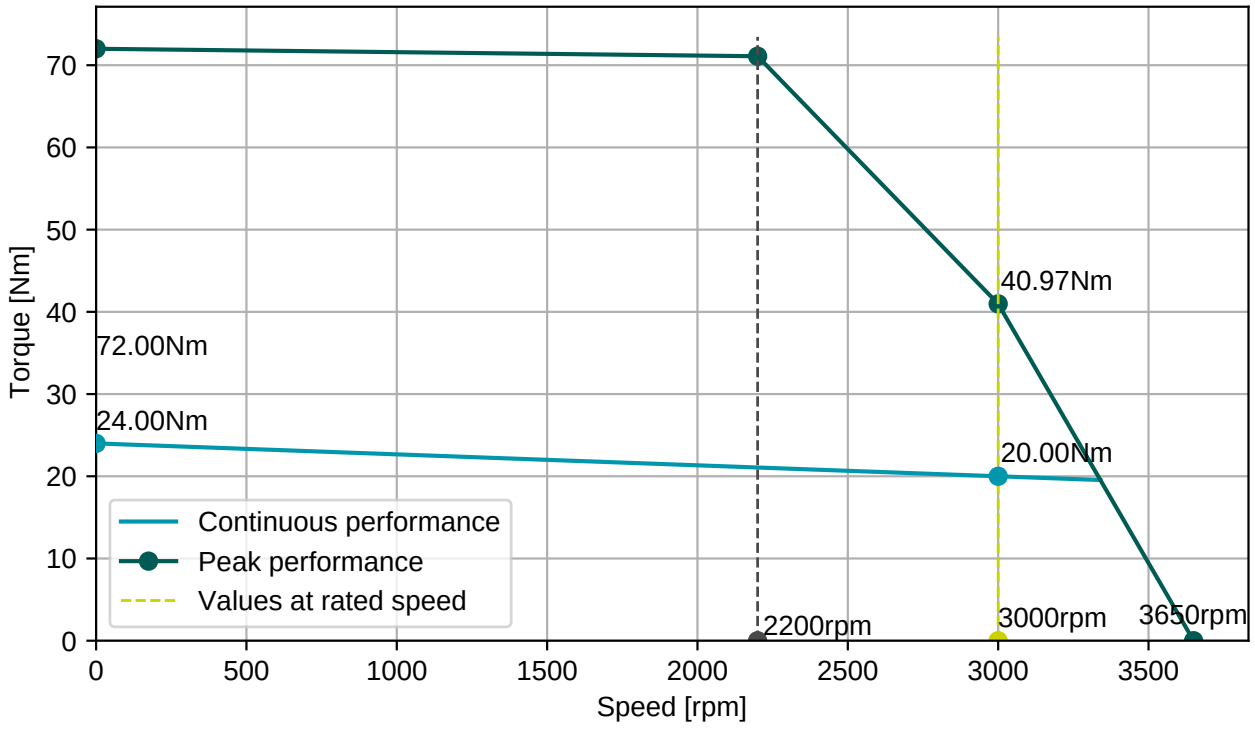


**BGC110N00001216000**

M23, 8 poles, rotary

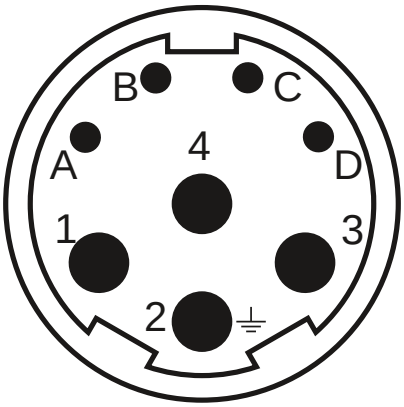


| Connector 1 (283) | |
|---|---|
| **1** | U |
| **4** | V |
| **3** | W |
| **2** | PE |
| **A** | Brake+ |
| **B** | Brake- |
| **C** | GND/DSL- |
| **D** | +Us/DSL+ |

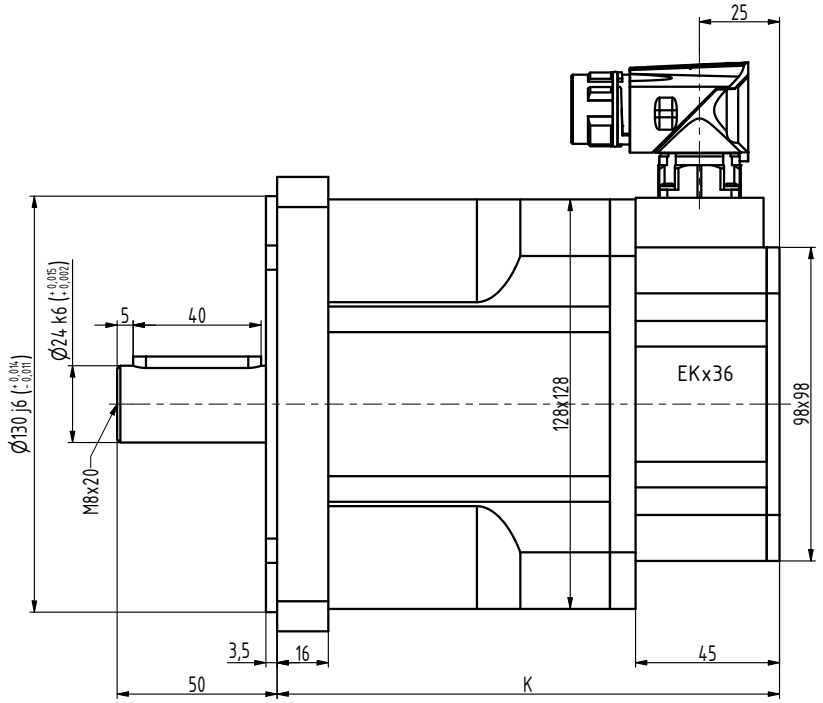


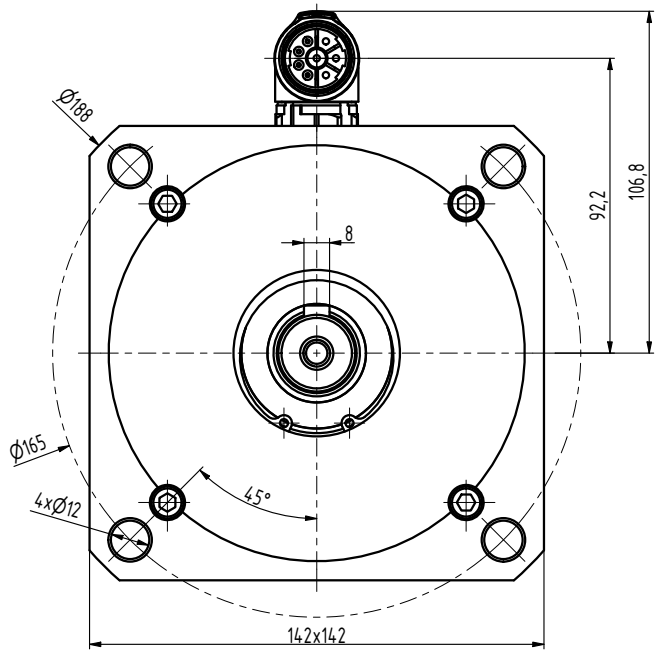


| TYP | K |
|---|---|
| N5-0650 | 127 |
| N5-1200 | 157 |
| N5-1600 | 187 |
| N5-2000 | 217 |
| N5-2400 | 247 |

| INDEX | ZMĚNA | DATUM | PODPIS | | |
|---|---|---|---|---|---|
| ZN.MAT. | | | T.O. | HMOTNOST kg | MĚŘ. |
| ROZM.-POLOT. | | | | | |
| POM. ZAŘ. | | | | ČSN | TŘ.Č. |
| VYPR. Ošlejšek | | NORM.REF. | | POZN. | Č. KUSOVNÍKU |
| PŘEKR. | | | | | |
| TECHNOL. | | SCHVÁLIL Ošlejšek | 11.09.2021 | STARÝ V. | Č.V. |

NÁZEV

Motor N5

N5087 10 P Z_S4_S1

Listů List