Engineering data (WIN 977)		
DC bus voltage	320	V DC
Nominal AC voltage	220	V AC (rms)
Rated voltage	185	V AC (rms)
Rated power	6.3	kW
Rated speed	3000	rpm
Rated torque	20.00	Nm
Rated current	22.97	A (rms)
Peak torque	72	Nm
Peak current	76.6	A (rms)
Stall torque	24	Nm
Stall current	22.3	A (rms)
No load speed	3380	rpm
EMF constant ±10%	65	V AC (rms) / 1000rpm
Theoretical torque constant ±10%	1.08	Nm / A (rms)
Torque constant ±10% @ rated load	0.87	Nm / A (rms)
Number of poles	10	
Electrical time constant	9.09	ms
Winding terminal resistance	0.22	Ω
Rotary field terminal inductance	2	mH

Customs info	
HS Code	85015220

Mechanical data (setting 48)		
Max mechanical speed	9000	rpm
Mech. time constant	0.62	ms
Thermal time constant	75	min
Rotor inertia	18.7	kgcm²
Protection	IP64	
Color	RAL 9005	
Cooling	Convection	
Motor-only mass	11.2	kg
Max. axial force 20kh	146	N
Max. radial force 20kh*	770	N
Max. axial force 100kh	86	N
Max. radial force 100kh*	450	N

** Defined for point of action at ½ output shaft length*

Sensors	
Temperature	PT1000 {PT1000}
Feedback	EKM36 (HDSL) multi-turn, 18+12 bits, SIL2

Torque / speed curve

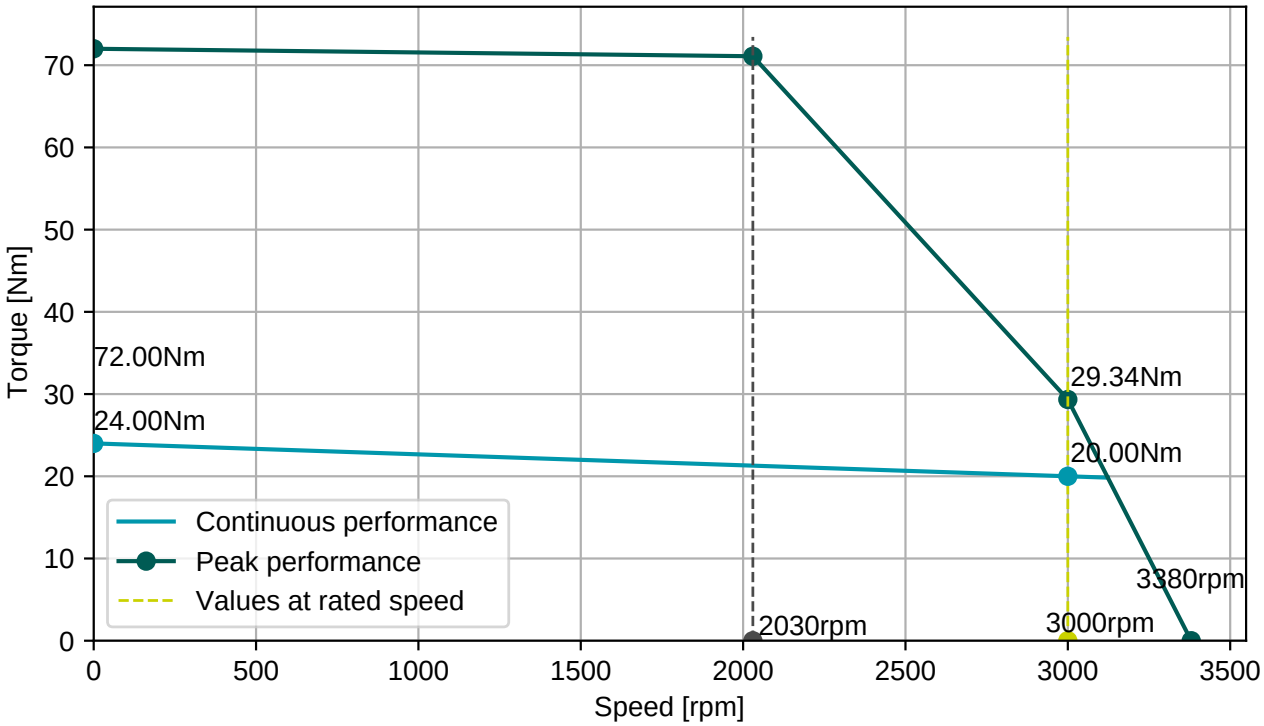

BGC110N00001216000

M23, 8 poles, rotary

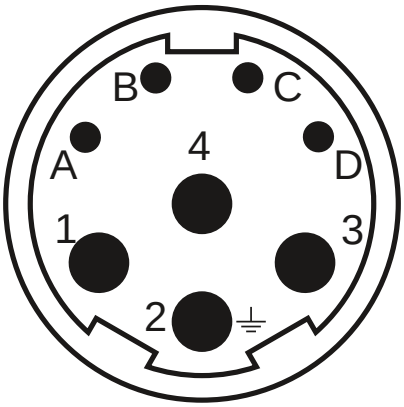

Connector 1 (283)	
1	U
4	V
3	W
2	PE
A	Brake+
B	Brake-
C	GND/DSL-
D	+Us/DSL+

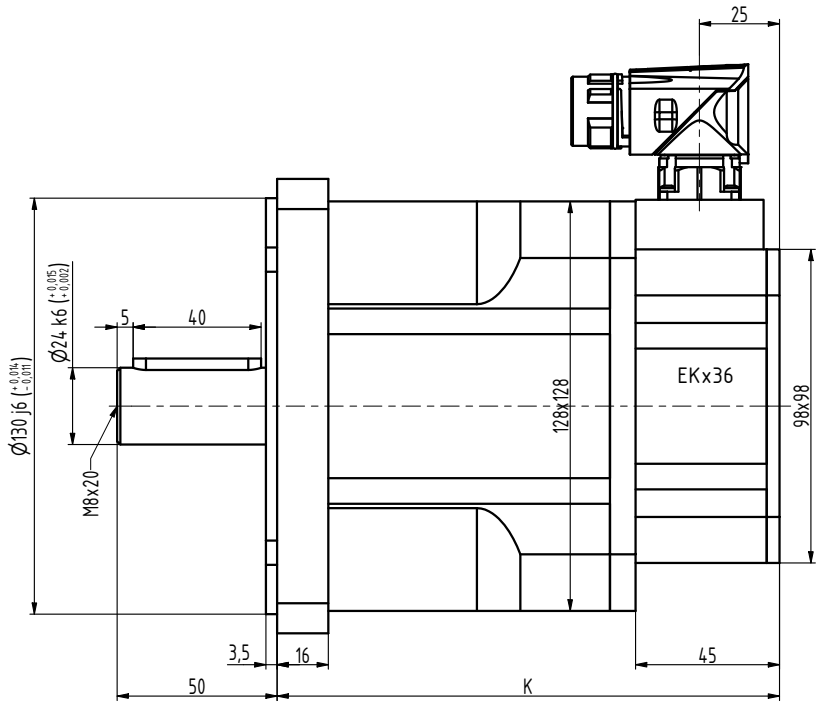

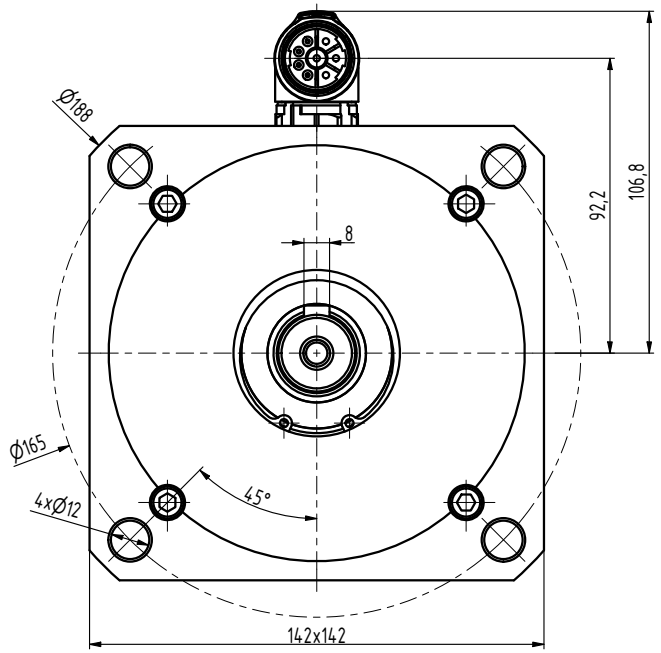

TYP	K
N5-0650	127
N5-1200	157
N5-1600	187
N5-2000	217
N5-2400	247

INDEX	ZMĚNA	DATUM	PODPIS		
ZN.MAT.			T.O.	HMOTNOST kg	MĚŘ.
ROZM.-POLOT.					
POM. ZAŘ.				ČSN	TŘ.Č.
VYPR. Ošlejšek		NORM.REF.		POZN.	Č. KUSOVNÍKU
PŘEKR.					
TECHNOL.		SCHVÁLIL Ošlejšek	11.09.2021	STARÝ V.	Č.V.

NÁZEV

Motor N5

N5087 10 P Z_S4_S1

Listů List