Engineering data (WIN 728)		
DC bus voltage	320	V DC
Nominal AC voltage	220	V AC (rms)
Rated voltage	164	V AC (rms)
Rated power	3.3	kW
Rated speed	3000	rpm
Rated torque	10.50	Nm
Rated current	14.73	A (rms)
Peak torque	36	Nm
Peak current	52.5	A (rms)
Stall torque	12	Nm
Stall current	14.2	A (rms)
No load speed	4310	rpm
EMF constant ±10%	51	V AC (rms) / 1000rpm
Theoretical torque constant ±10%	0.84	Nm / A (rms)
Torque constant ±10% @ rated load	0.71	Nm / A (rms)
Number of poles	10	
Electrical time constant	8.10	ms
Winding terminal resistance	0.42	Ω
Rotary field terminal inductance	3.4	mH

Customs info	
HS Code	85015220

Mechanical data (setting 48)		
Max mechanical speed	9000	rpm
Mech. time constant	0.81	ms
Thermal time constant	45	min
Rotor inertia	7.9	kgcm²
Protection	IP64	
Color	RAL 9005	
Cooling	Convection	
Motor-only mass	11.2	kg
Max. axial force 20kh	126	N
Max. radial force 20kh*	665	N
Max. axial force 100kh	74	N
Max. radial force 100kh*	389	N

** Defined for point of action at ½ output shaft length*

Sensors	
Temperature	PT1000 {PT1000}
Feedback	EKS36 (HDSL) single-turn, 18 bits, SIL2

Torque / speed curve

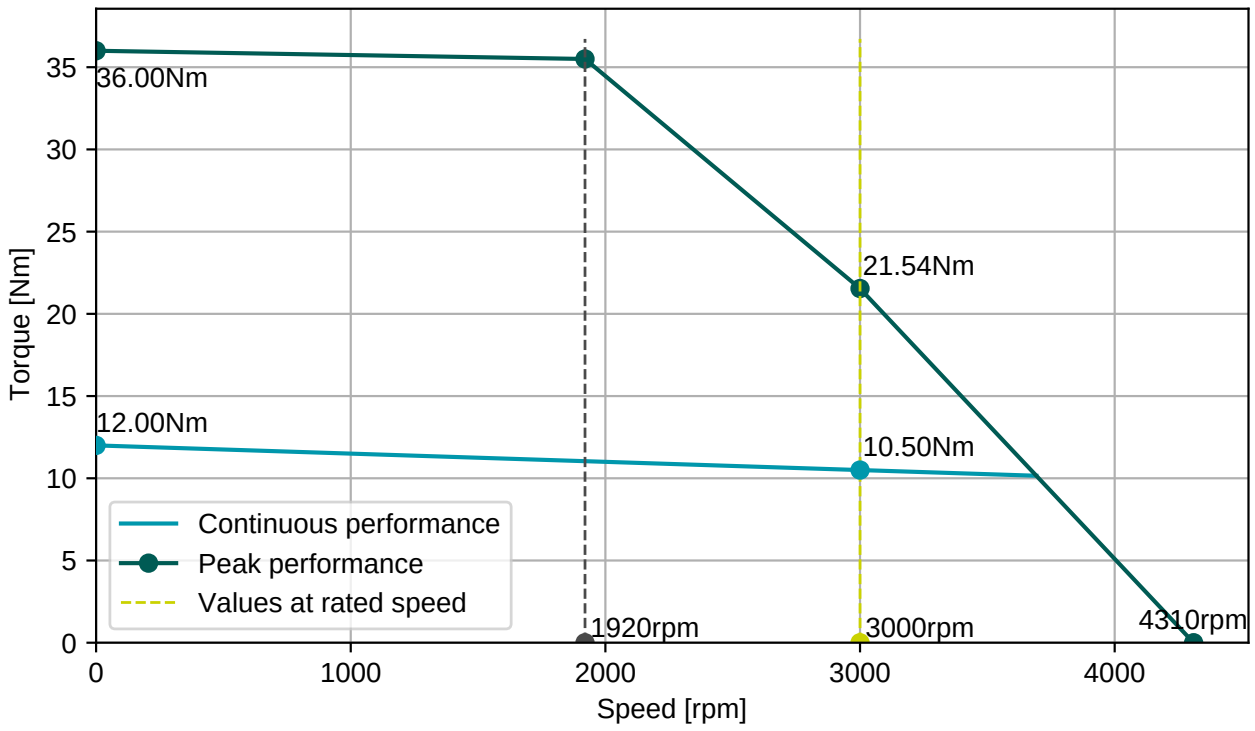

BGC110N00001216000

M23, 8 poles, rotary

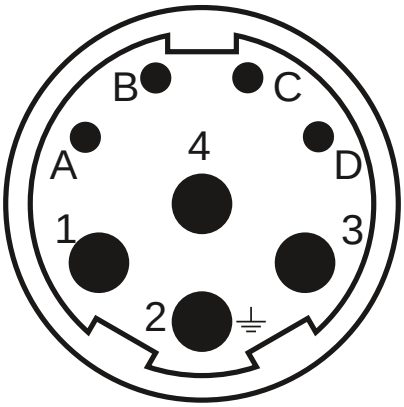

Connector 1 (283)	
1	U
4	V
3	W
2	PE
A	Brake+
B	Brake-
C	GND/DSL-
D	+Us/DSL+

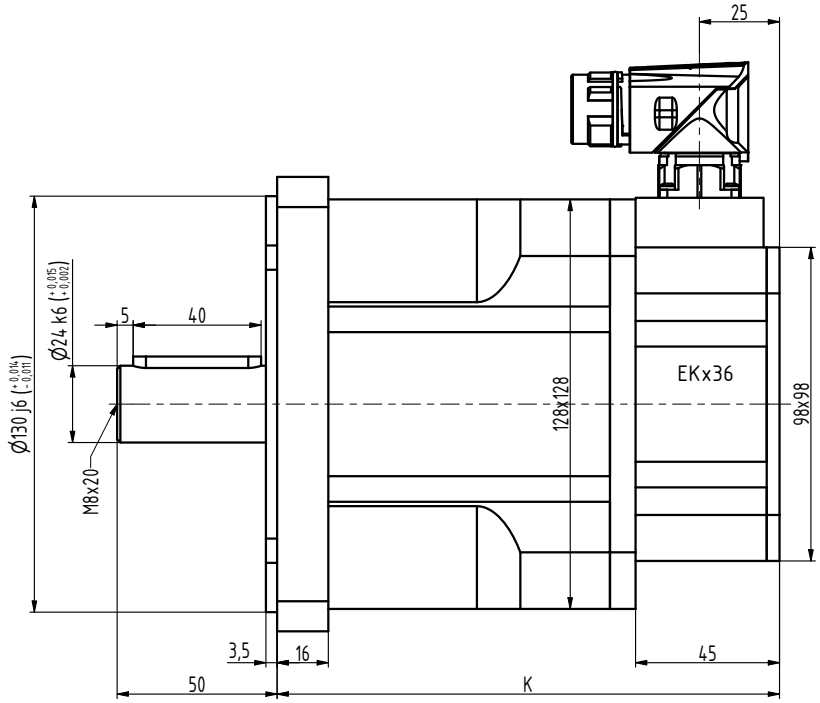

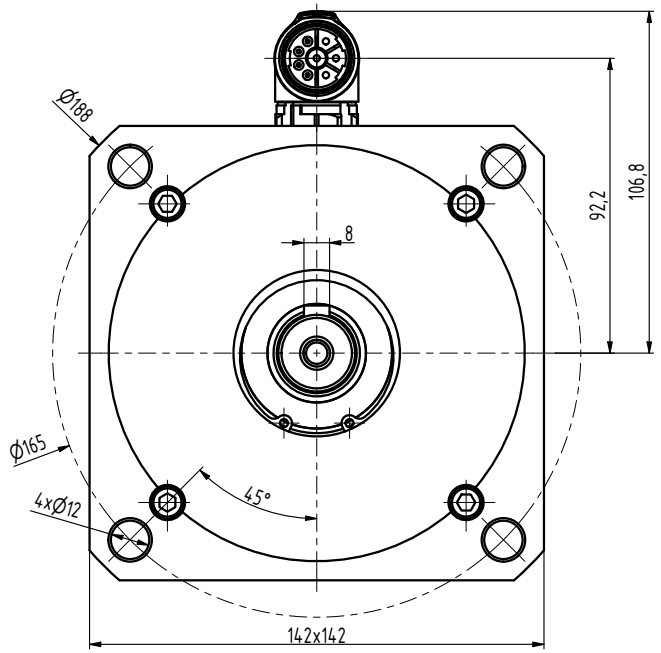

TYP	K
N5-0650	127
N5-1200	157
N5-1600	187
N5-2000	217
N5-2400	247

INDEX	ZMĚNA	DATUM	PODPIS		
ZN.MAT.			T.O.	HMOTNOST kg	MĚŘ.
ROZM.-POLOT.					
POM. ZAŘ.				ČSN	TŘ.Č.
VYPR. Ošlejšek		NORM.REF.		POZN.	Č. KUSOVNÍKU
PŘEKR.					
TECHNOL.		SCHVÁLIL Ošlejšek	11.09.2021	STARÝ V.	Č.V.

NÁZEV

Motor N5

N5087 10 P Z_S4_S1

Listů List