| Engineering data (WIN 731) | | |
|---|---|---|
| DC bus voltage | 560 | V DC |
| Nominal AC voltage | 380 | V AC (rms) |
| Rated voltage | 296 | V AC (rms) |
| Rated power | 4.3 | kW |
| Rated speed | 3000 | rpm |
| Rated torque | 13.80 | Nm |
| Rated current | 9.89 | A (rms) |
| Peak torque | 48 | Nm |
| Peak current | 35.6 | A (rms) |
| Stall torque | 16 | Nm |
| Stall current | 10.1 | A (rms) |
| No load speed | 3950 | rpm |
| EMF constant ±10% | 96 | V AC (rms) / 1000rpm |
| Theoretical torque constant ±10% | 1.59 | Nm / A (rms) |
| Torque constant ±10% @ rated load | 1.40 | Nm / A (rms) |
| Number of poles | 10 | |
| Electrical time constant | 8.52 | ms |
| Winding terminal resistance | 0.88 | Ω |
| Rotary field terminal inductance | 7.5 | mH |

| Customs info | |
|---|---|
| HS Code | 85015220 |

| Mechanical data (setting 48) | | |
|---|---|---|
| Max mechanical speed | 9000 | rpm |
| Mech. time constant | 0.70 | ms |
| Thermal time constant | 55 | min |
| Rotor inertia | 11.5 | kgcm² |
| Protection | IP64 | |
| Color | RAL 9005 | |
| Cooling | Convection | |
| Motor-only mass | 11.2 | kg |
| Max. axial force 20kh | 138 | N |
| Max. radial force 20kh* | 724 | N |
| Max. axial force 100kh | 80 | N |
| Max. radial force 100kh* | 423 | N |

** Defined for point of action at ½ output shaft length*

| Sensors | |
|---|---|
| Temperature | PT1000 {PT1000} |
| Feedback | EKM36 (HDSL) multi-turn, 18+12 bits, SIL2 |

| Brake | | |
|---|---|---|
| Braking torque | 18.00 | Nm |
| Voltage | 24 | V DC |
| Power @20°C | 24.0 | W |
| Current @20°C | 1.00 | A |
| Inertia | 2.00 | kgcm² |
| Mass | 1.80 | kg |

Torque / speed curve

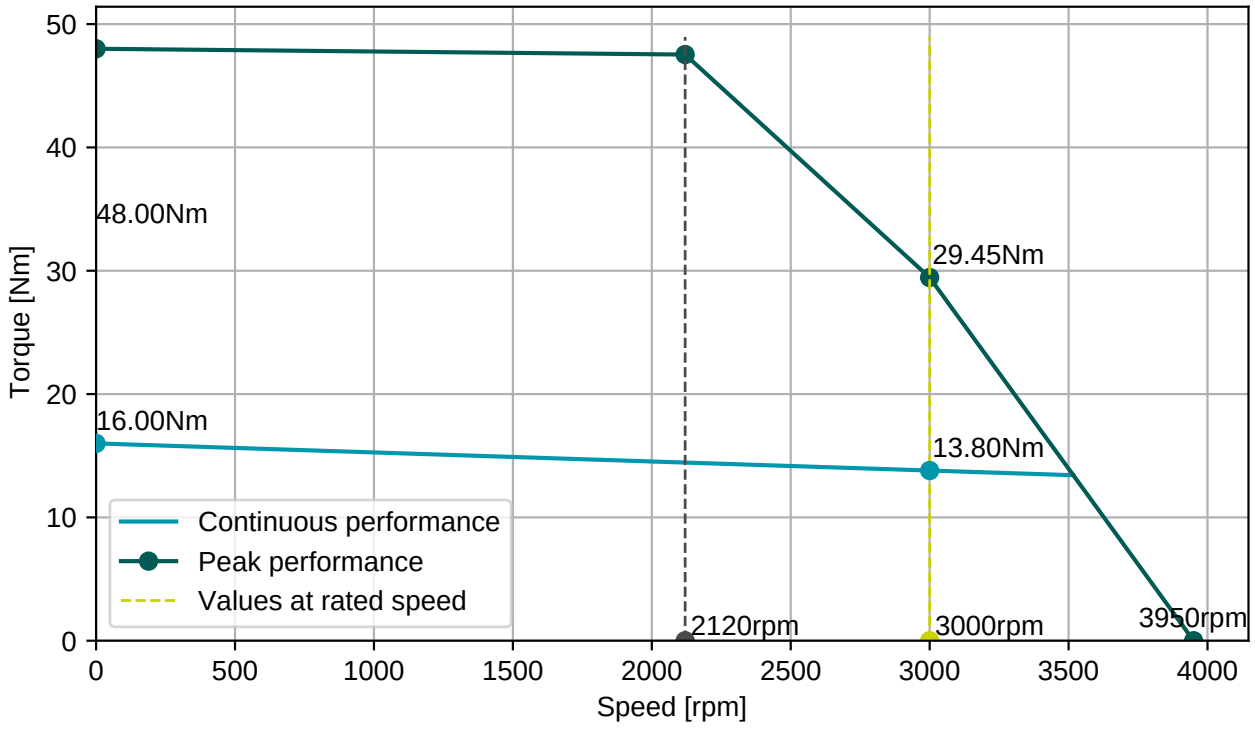


**BGC110N00001216000**

M23, 8 poles, rotary

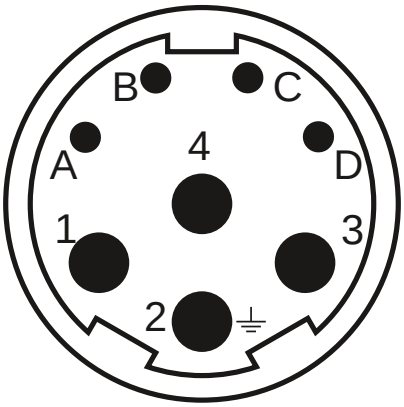


| Connector 1 (283) | |
|---|---|
| **1** | U |
| **4** | V |
| **3** | W |
| **2** | PE |
| **A** | Brake+ |
| **B** | Brake- |
| **C** | GND/DSL- |
| **D** | +Us/DSL+ |

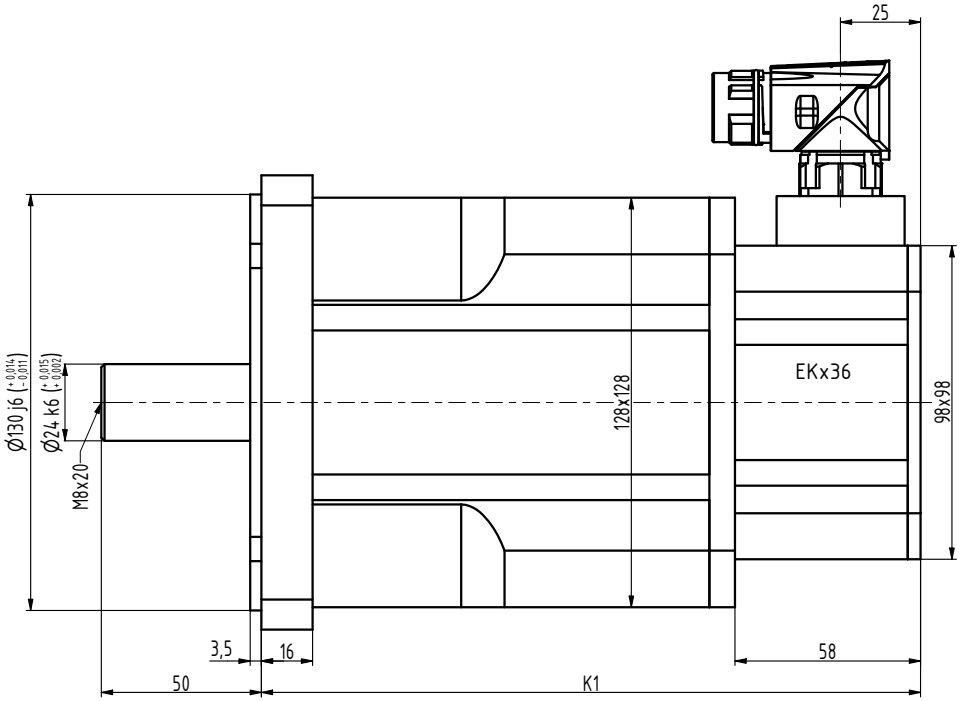


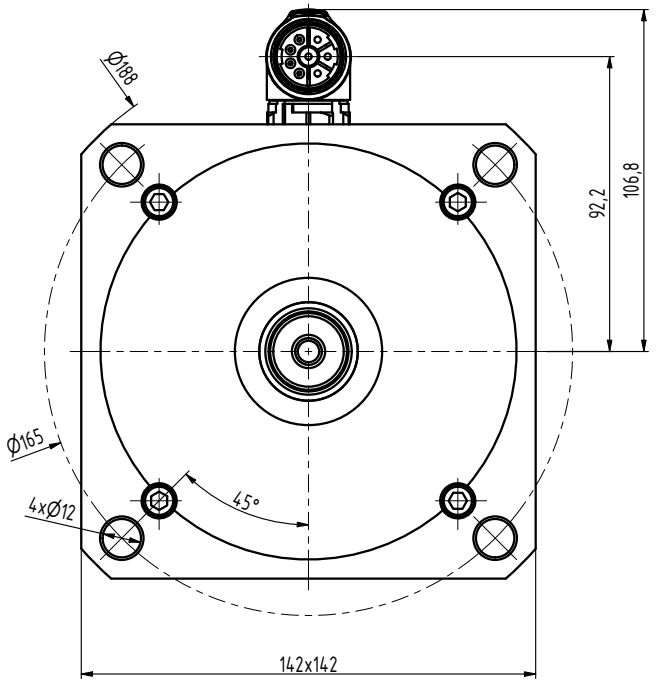


| TYP | K1 |
|---|---|
| N5-0650 | 176 |
| N5-1200 | 206 |
| N5-1600 | 236 |
| N5-2000 | 266 |
| N5-2400 | 296 |

| INDEX | ZMĚNA | DATUM | PODPIS |
|---|---|---|---|
| | | | |

| | | | | |
|---|---|---|---|---|
| ZN.MAT. | | T.O. | HMOTNOST kg | MĚŘ. |
| ROZM.-POLOT. | | | | |
| POM. ZAŘ. | | | ČSN | TŘ.Č. |
| VYPR. Ošlejšek | NORM.REF. | | POZN. | Č. KUSOVNÍKU |
| PŘEKR. | | | | |
| TECHNOL. | SCHVÁLIL Ošlejšek | 11.09.2021 | STARÝ V. | Č.V. |

NÁZEV

Motor N5

N5087 10 B Z_S4_S1

Listů List