Engineering data (WIN 730)		
DC bus voltage	320	V DC
Nominal AC voltage	220	V AC (rms)
Rated voltage	166	V AC (rms)
Rated power	3.1	kW
Rated speed	2000	rpm
Rated torque	14.60	Nm
Rated current	12.59	A (rms)
Peak torque	48	Nm
Peak current	44.3	A (rms)
Stall torque	16	Nm
Stall current	12.6	A (rms)
No load speed	2850	rpm
EMF constant ±10%	77	V AC (rms) / 1000rpm
Theoretical torque constant ±10%	1.27	Nm / A (rms)
Torque constant ±10% @ rated load	1.16	Nm / A (rms)
Number of poles	10	
Electrical time constant	8.60	ms
Winding terminal resistance	0.57	Ω
Rotary field terminal inductance	4.9	mH

Customs info	
HS Code	85015220

Mechanical data (setting 48)		
Max mechanical speed	9000	rpm
Mech. time constant	0.70	ms
Thermal time constant	55	min
Rotor inertia	11.5	kgcm²
Protection	IP64	
Color	RAL 9005	
Cooling	Convection	
Motor-only mass	11.2	kg
Max. axial force 20kh	155	N
Max. radial force 20kh*	817	N
Max. axial force 100kh	91	N
Max. radial force 100kh*	478	N

** Defined for point of action at ½ output shaft length*

Sensors	
Temperature	PT1000 {PT1000}
Feedback	EKM36 (HDSL) multi-turn, 17 + 12 bits

Torque / speed curve

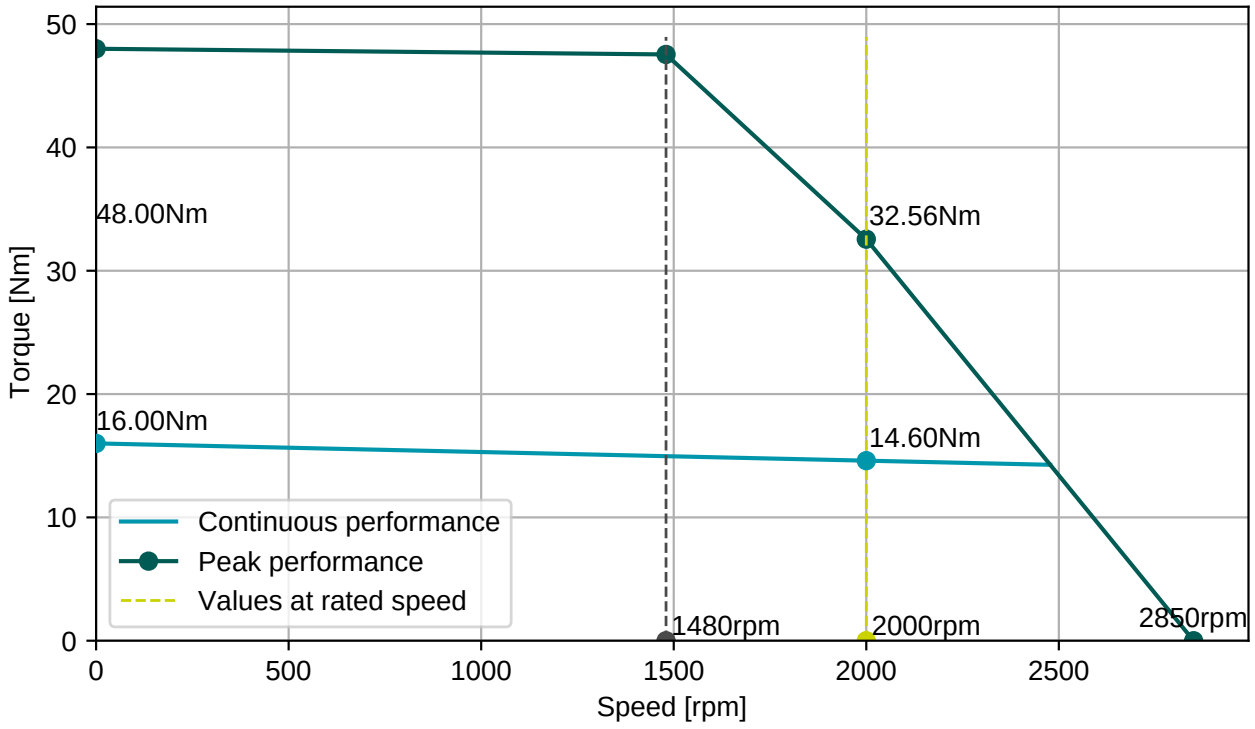

BGC110N00001216000

M23, 8 poles, rotary

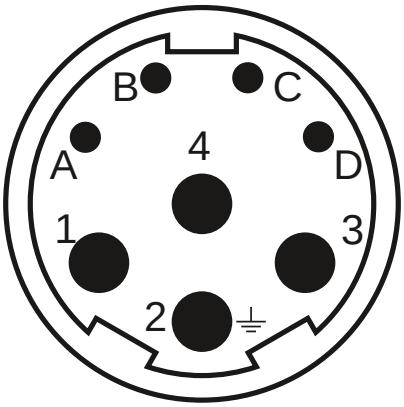

Connector 1 (283)	
1	U
4	V
3	W
2	PE
A	Brake+
B	Brake-
C	GND/DSL-
D	+Us/DSL+

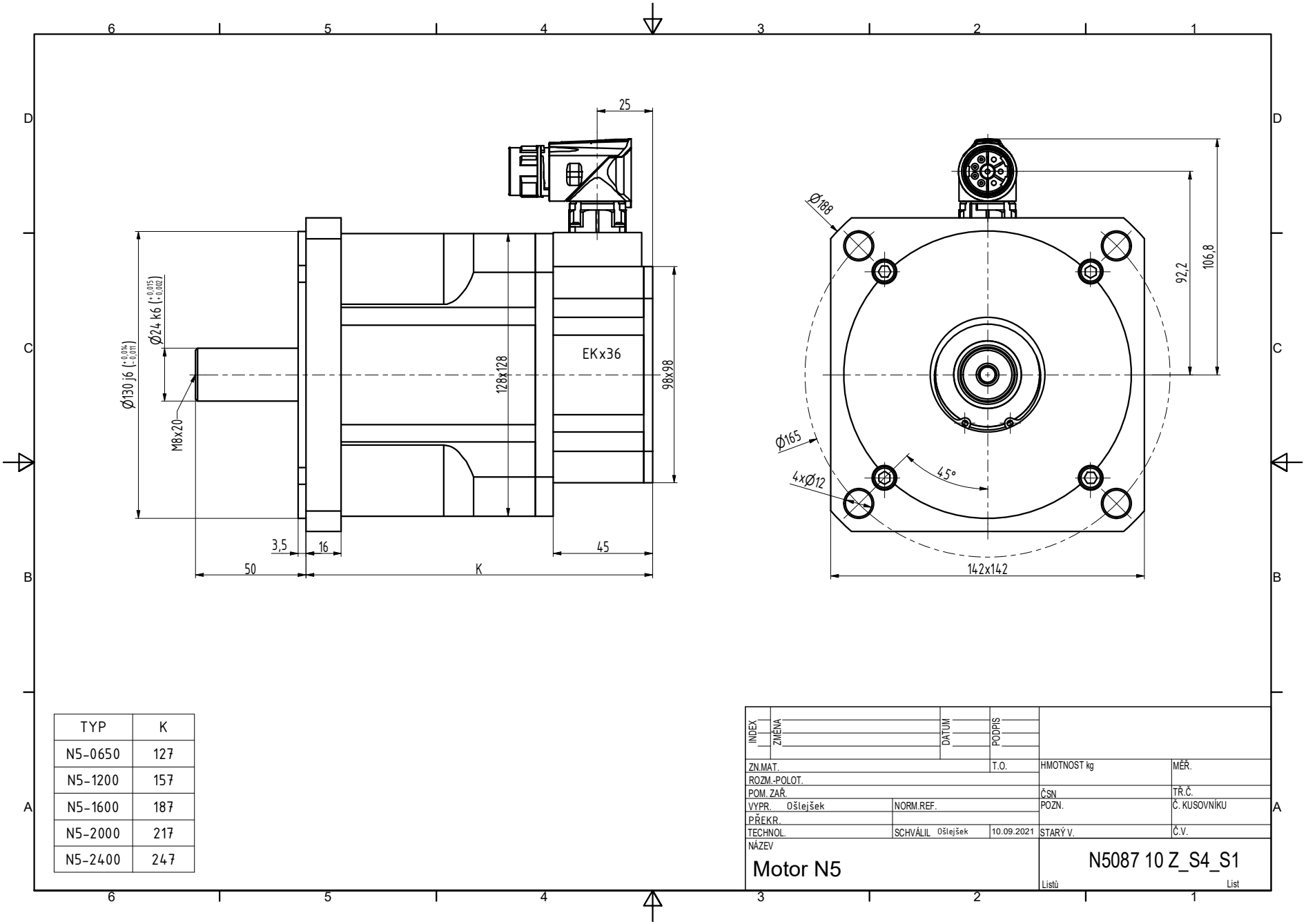

TYP	K
N5-0650	127
N5-1200	157
N5-1600	187
N5-2000	217
N5-2400	247

INDEX	ZMĚNA	DATUM	PODPIS

ZN.MAT.		T.O.	HMOTNOST kg	MĚŘ.	
ROZM.-POLOT.					
POM. ZAŘ.			ČSN	TŘ.Č.	
VYPR. Ošlejšek	NORM.REF.		POZN.	Č. KUSOVNÍKU	
PŘEKR.					
TECHNOL.	SCHVÁLIL Ošlejšek	10.09.2021	STARÝ V.	Č.V.	

NÁZEV

Motor N5

N5087 10 Z_S4_S1

Listů List