| Engineering data (WIN 709) | | |
|---|---|---|
| DC bus voltage | 560 | V DC |
| Nominal AC voltage | 380 | V AC (rms) |
| Rated voltage | 276 | V AC (rms) |
| Rated power | 1.3 | kW |
| Rated speed | 3000 | rpm |
| Rated torque | 4.20 | Nm |
| Rated current | 3.94 | A (rms) |
| Peak torque | 15.3 | Nm |
| Peak current | 17.4 | A (rms) |
| Stall torque | 5.1 | Nm |
| Stall current | 3.81 | A (rms) |
| No load speed | 4650 | rpm |
| EMF constant ±10% | 81 | V AC (rms) / 1000rpm |
| Theoretical torque constant ±10% | 1.34 | Nm / A (rms) |
| Torque constant ±10% @ rated load | 1.07 | Nm / A (rms) |
| Number of poles | 10 | |
| Electrical time constant | 5.45 | ms |
| Winding terminal resistance | 3.98 | Ω |
| Rotary field terminal inductance | 21.7 | mH |

| Customs info | |
|---|---|
| HS Code | 85015220 |

| Mechanical data (setting 48) | | |
|---|---|---|
| Max mechanical speed | 9000 | rpm |
| Mech. time constant | 0.78 | ms |
| Thermal time constant | 25 | min |
| Rotor inertia | 2.04 | kgcm² |
| Protection | IP64 | |
| Color | RAL 9005 | |
| Cooling | Convection | |
| Motor-only mass | 4.7 | kg |
| Max. axial force 20kh | 116 | N |
| Max. radial force 20kh* | 611 | N |
| Max. axial force 100kh | 68 | N |
| Max. radial force 100kh* | 357 | N |

** Defined for point of action at ½ output shaft length*

| Sensors | |
|---|---|
| Temperature | PT1000 {PT1000} |
| Feedback | EDS35 (HDSL) single-turn, 24 bits |

| Brake | | |
|---|---|---|
| Braking torque | 9.00 | Nm |
| Voltage | 24 | V DC |
| Power @20°C | 18.0 | W |
| Current @20°C | 0.75 | A |
| Inertia | 0.60 | kgcm² |
| Mass | 0.82 | kg |

Torque / speed curve

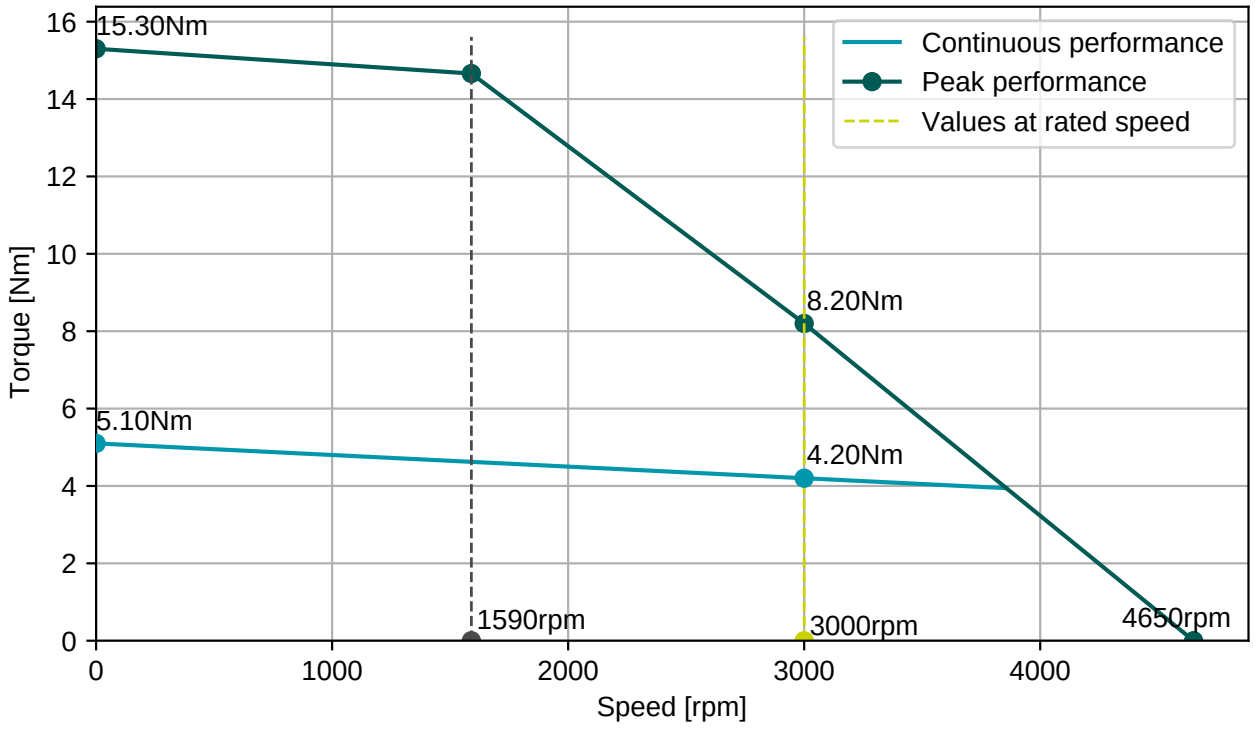


**BGC110N00001216000**

M23, 8 poles, rotary

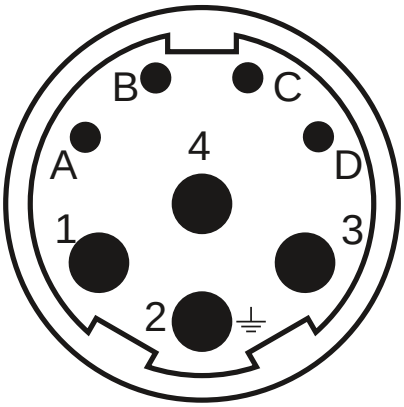


| Connector 1 (283) | |
|---|---|
| **1** | U |
| **4** | V |
| **3** | W |
| **2** | PE |
| **A** | Brake+ |
| **B** | Brake- |
| **C** | GND/DSL- |
| **D** | +Us/DSL+ |

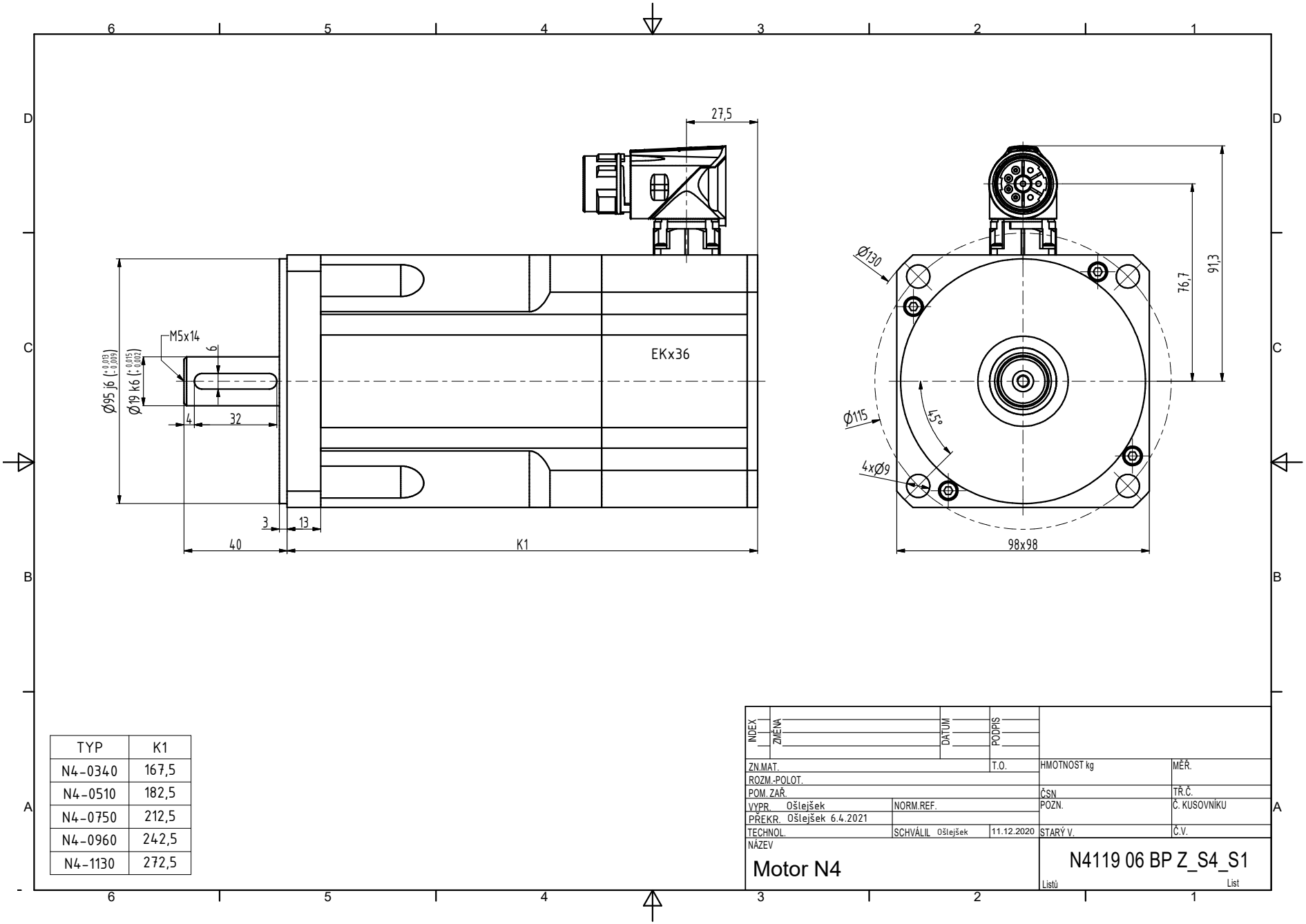


| TYP | K1 |
|---|---|
| N4-0340 | 167,5 |
| N4-0510 | 182,5 |
| N4-0750 | 212,5 |
| N4-0960 | 242,5 |
| N4-1130 | 272,5 |

| INDEX | ZMĚNA | DATUM | PODPIS |
|---|---|---|---|
| | | | |

| | | | | |
|---|---|---|---|---|
| ZN.MAT. | | T.O. | HMOTNOST kg | MĚŘ. |
| ROZM.-POLOT. | | | | |
| POM. ZAŘ. | | | ČSN | TŘ.Č. |
| VYPR. Ošlejšek | NORM.REF. | | POZN. | Č. KUSOVNÍKU |
| PŘEKR. Ošlejšek 6.4.2021 | | | | |
| TECHNOL. | SCHVÁLIL Ošlejšek | 11.12.2020 | STARÝ V. | Č.V. |

NÁZEV

Motor N4

N4119 06 BP Z_S4_S1

Listů List