Engineering data (WIN 711)		
DC bus voltage	560	V DC
Nominal AC voltage	380	V AC (rms)
Rated voltage	277	V AC (rms)
Rated power	1.9	kW
Rated speed	3000	rpm
Rated torque	6.10	Nm
Rated current	5.14	A (rms)
Peak torque	22.5	Nm
Peak current	23.8	A (rms)
Stall torque	7.5	Nm
Stall current	5.2	A (rms)
No load speed	4350	rpm
EMF constant ±10%	87	V AC (rms) / 1000rpm
Theoretical torque constant ±10%	1.44	Nm / A (rms)
Torque constant ±10% @ rated load	1.19	Nm / A (rms)
Number of poles	10	
Electrical time constant	5.90	ms
Winding terminal resistance	2.29	Ω
Rotary field terminal inductance	13.5	mH

Customs info	
HS Code	85015220

Mechanical data (setting 48)		
Max mechanical speed	9000	rpm
Mech. time constant	0.62	ms
Thermal time constant	30	min
Rotor inertia	3.26	kgcm²
Protection	IP64	
Color	RAL 9005	
Cooling	Convection	
Motor-only mass	4.7	kg
Max. axial force 20kh	125	N
Max. radial force 20kh*	660	N
Max. axial force 100kh	73	N
Max. radial force 100kh*	386	N

** Defined for point of action at ½ output shaft length*

Sensors	
Temperature	PT1000 {PT1000}
Feedback	EKM36 (HDSL) multi-turn, 18+12 bits, SIL2

Brake		
Braking torque	9.00	Nm
Voltage	24	V DC
Power @20°C	18.0	W
Current @20°C	0.75	A
Inertia	0.60	kgcm²
Mass	0.82	kg

Torque / speed curve

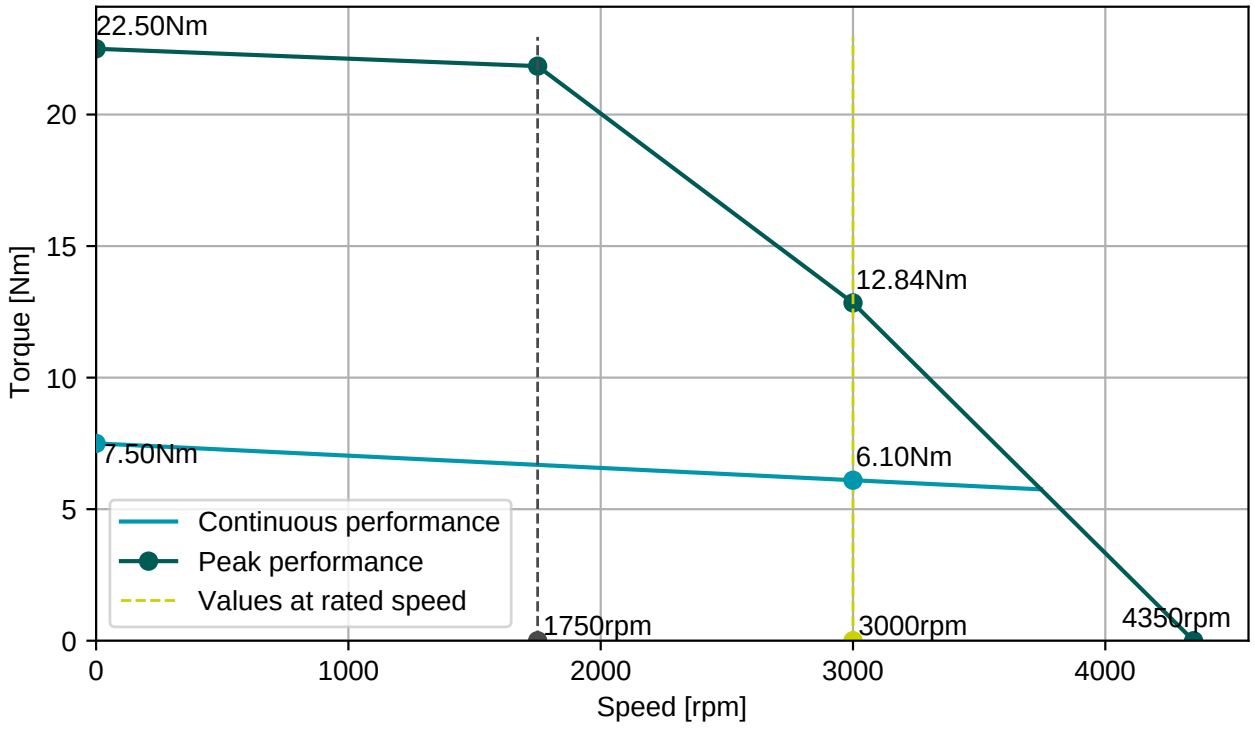

BGC110N00001216000

M23, 8 poles, rotary

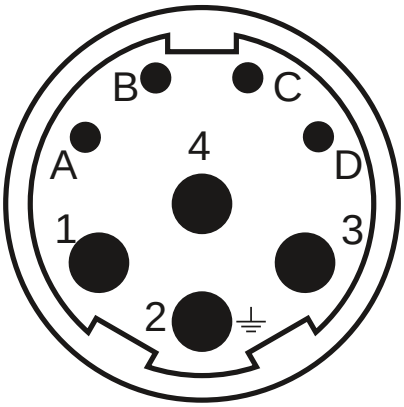

Connector 1 (283)	
1	U
4	V
3	W
2	PE
A	Brake+
B	Brake-
C	GND/DSL-
D	+Us/DSL+

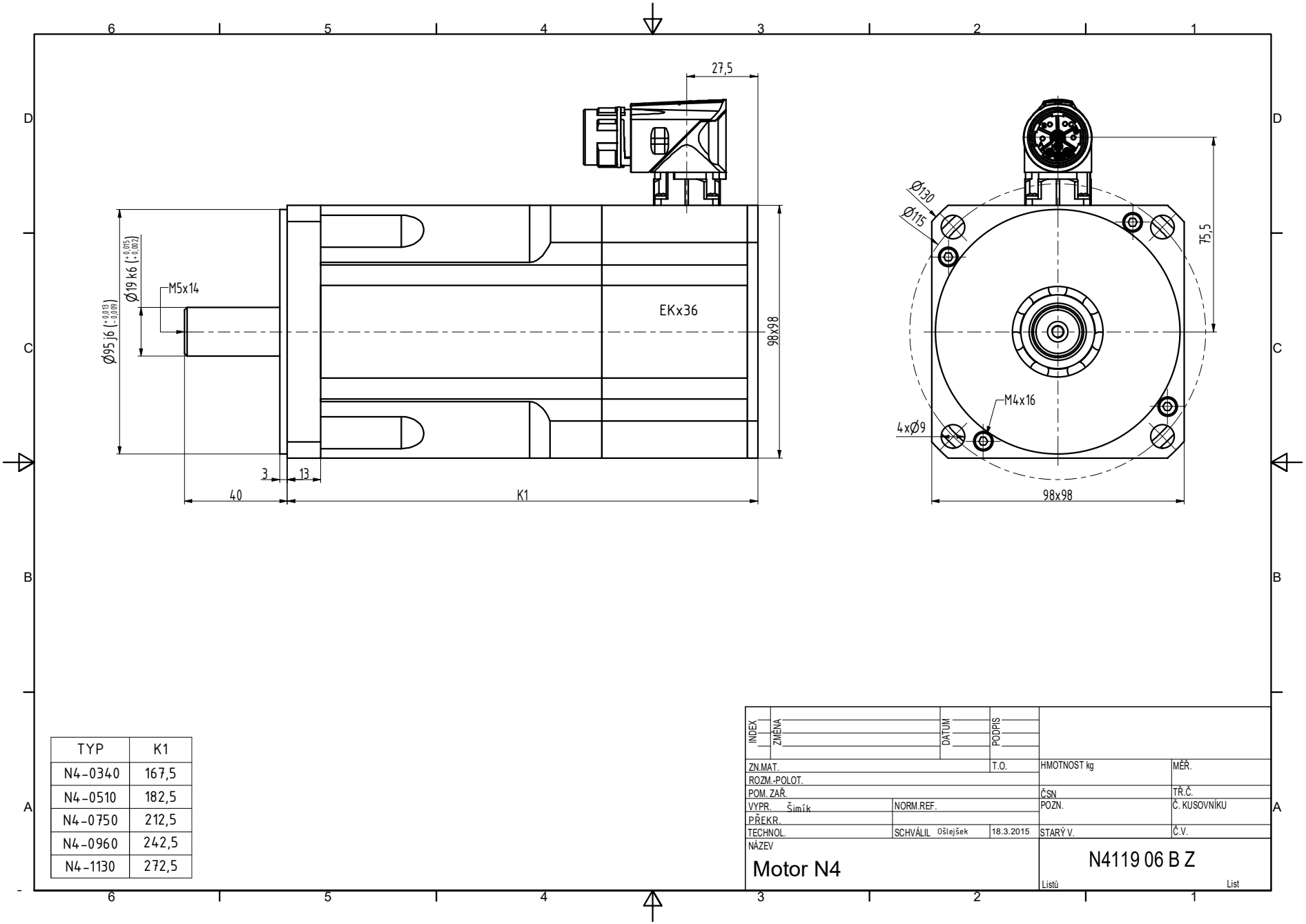

TYP	K1
N4-0340	167,5
N4-0510	182,5
N4-0750	212,5
N4-0960	242,5
N4-1130	272,5

INDEX	ZMĚNA	DATUM	PODPIS

ZN.MAT.		T.O.	HMOTNOST kg	MĚŘ.	
ROZM.-POLOT.					
POM. ZAŘ.			ČSN	TŘ.Č.	
VYPR. Šimík	NORM.REF.		POZN.	Č. KUSOVNÍKU	
PŘEKR.					
TECHNOL.	SCHVÁLIL Ošlejšek	18.3.2015	STARÝ V.	Č.V.	

NÁZEV

Motor N4

N4119 06 B Z

Listů List