Engineering data (WIN 954)		
DC bus voltage	560	V DC
Nominal AC voltage	380	V AC (rms)
Rated voltage	310	V AC (rms)
Rated power	1.2	kW
Rated speed	3000	rpm
Rated torque	3.70	Nm
Rated current	2.6	A (rms)
Peak torque	14.4	Nm
Peak current	10.1	A (rms)
Stall torque	4.8	Nm
Stall current	2.82	A (rms)
No load speed	3680	rpm
EMF constant ±10%	103	V AC (rms) / 1000rpm
Theoretical torque constant ±10%	1.7	Nm / A (rms)
Torque constant ±10% @ rated load	1.4	Nm / A (rms)
Number of poles	10	
Electrical time constant	3.01	ms
Winding terminal resistance	7.53	Ω
Rotary field terminal inductance	22.7	mH

Customs info	
HS Code	85015220

Mechanical data (setting 48)		
Max mechanical speed	12000	rpm
Mech. time constant	0.68	ms
Thermal time constant	30	min
Rotor inertia	1.52	kgcm²
Protection	IP64	
Color	RAL 9005	
Cooling	Convection	
Motor-only mass	4.3	kg
Max. axial force 20kh	75	N
Max. radial force 20kh*	393	N
Max. axial force 100kh	44	N
Max. radial force 100kh*	230	N

** Defined for point of action at ½ output shaft length*

Sensors	
Temperature	PT1000 {PT1000}
Feedback	EKS36 (HDSL) single-turn, 17 bits

Brake		
Braking torque	4.50	Nm
Voltage	24	V DC
Power @20°C	12.0	W
Current @20°C	0.50	A
Inertia	0.20	kgcm²
Mass	0.47	kg

Torque / speed curve

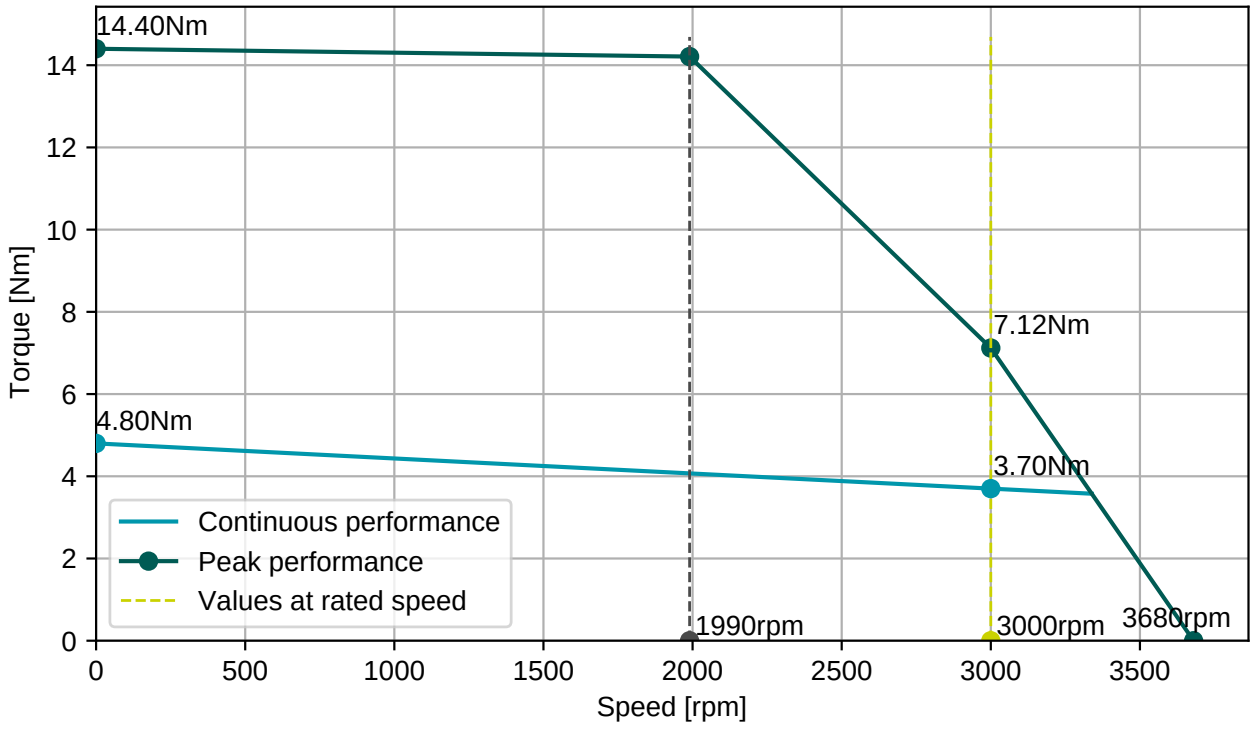

EGA201N00000800000

M15, 9 poles, rotary

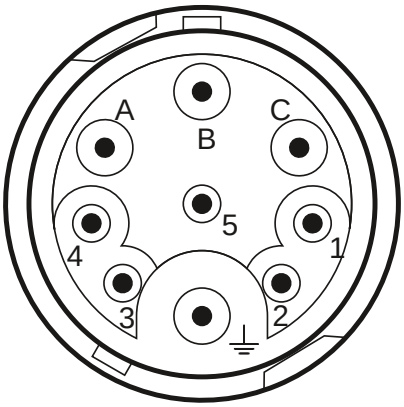

Connector 1 (304)	
A	U
B	V
C	W
PE	PE
1	Brake+
2	Brake-
3	+Us/DSL+
4	GND/DSL-

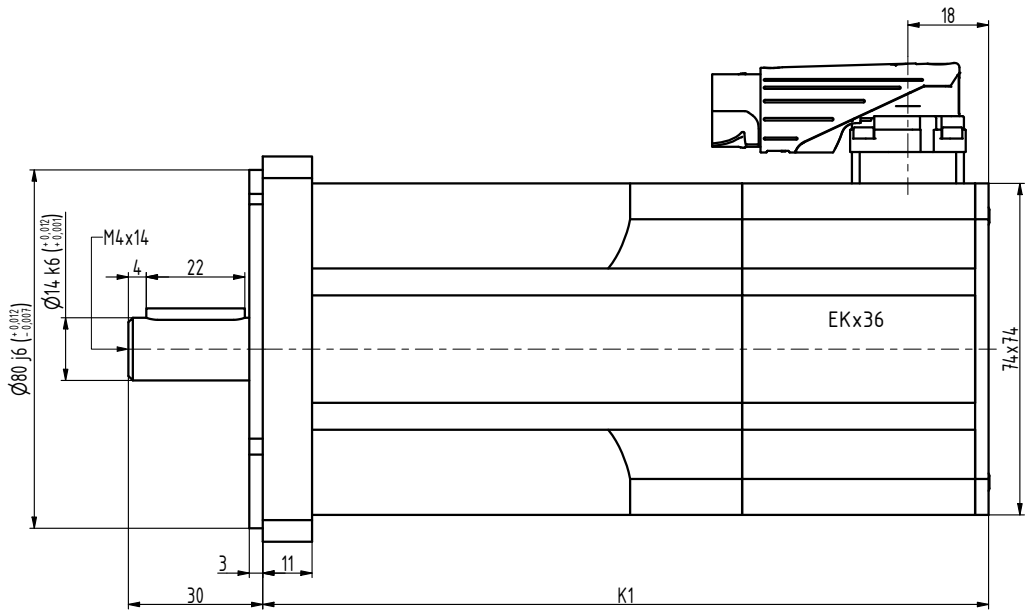

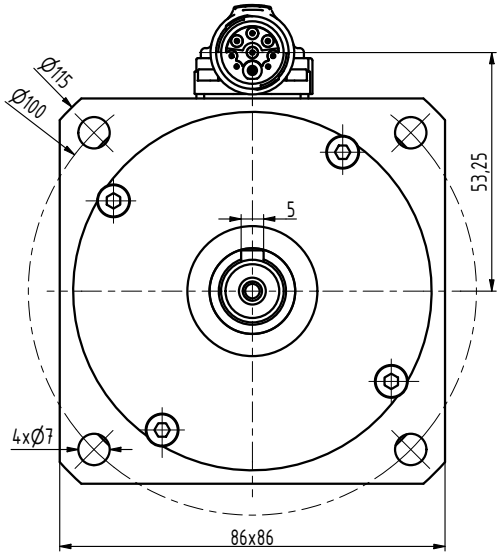

TYP	K1
N3-0115	144
N3-0205	162
N3-280	180
N3-0350	198
N3-0420	216
N3-0480	234

INDEX	ZMĚNA	DATUM	PODPIS		
ZN.MAT.			T.O.	HMOTNOST kg	MĚŘ.
ROZM.-POLOT.					
POM. ZAŘ.				ČSN	TŘ.Č.
VYPR. Šimík		NORM.REF.		POZN.	Č. KUSOVNÍKU
PŘEKR. Šimík 22.10.2018					
TECHNOL.		SCHVÁLIL Ošlejšek	22.10.2018	STARÝ V.	Č.V.
NÁZEV	Motor N3			N3119 10 BP Z	
				Listů	List