Engineering data (WIN 807)		
DC bus voltage	320	V DC
Nominal AC voltage	220	V AC (rms)
Rated voltage	180	V AC (rms)
Rated power	1.2	kW
Rated speed	3000	rpm
Rated torque	3.70	Nm
Rated current	4.46	A (rms)
Peak torque	14.4	Nm
Peak current	17.3	A (rms)
Stall torque	4.8	Nm
Stall current	4.84	A (rms)
No load speed	3660	rpm
EMF constant ±10%	60	V AC (rms) / 1000rpm
Theoretical torque constant ±10%	0.99	Nm / A (rms)
Torque constant ±10% @ rated load	0.83	Nm / A (rms)
Number of poles	10	
Electrical time constant	3.00	ms
Winding terminal resistance	2.5	Ω
Rotary field terminal inductance	7.5	mH

Customs info	
HS Code	85015220

Mechanical data (setting 48)		
Max mechanical speed	12000	rpm
Mech. time constant	0.67	ms
Thermal time constant	30	min
Rotor inertia	1.52	kgcm²
Protection	IP64	
Color	RAL 9005	
Cooling	Convection	
Motor-only mass	4.3	kg
Max. axial force 20kh	75	N
Max. radial force 20kh*	393	N
Max. axial force 100kh	44	N
Max. radial force 100kh*	230	N

** Defined for point of action at ½ output shaft length*

Sensors	
Temperature	PT1000 {PT1000}
Feedback	EKM36 (HDSL) multi-turn, 18+12 bits, SIL2

Brake		
Braking torque	4.50	Nm
Voltage	24	V DC
Power @20°C	12.0	W
Current @20°C	0.50	A
Inertia	0.20	kgcm²
Mass	0.47	kg

Torque / speed curve

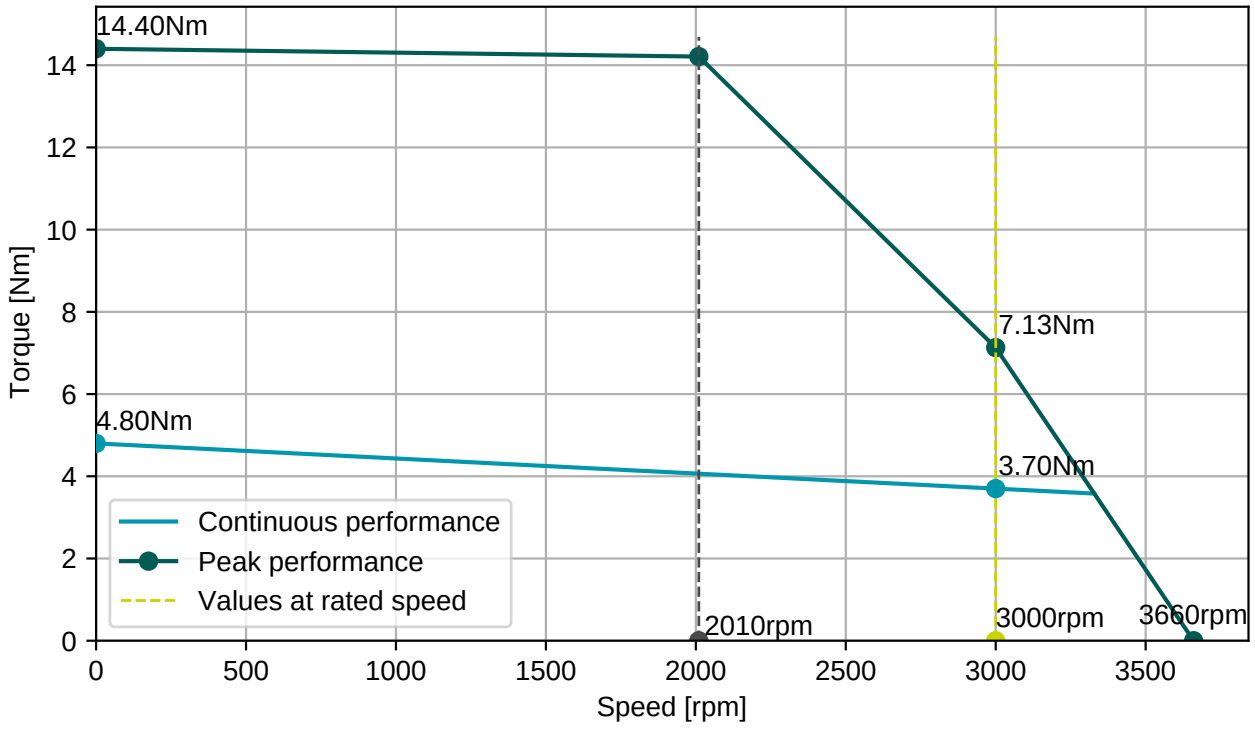

EGA201N00000800000

M15, 9 poles, rotary

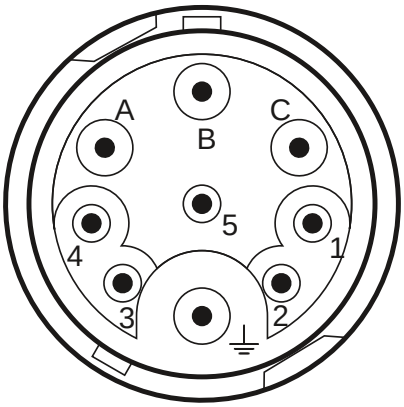

Connector 1 (304)	
A	U
B	V
C	W
PE	PE
1	Brake+
2	Brake-
3	+Us/DSL+
4	GND/DSL-

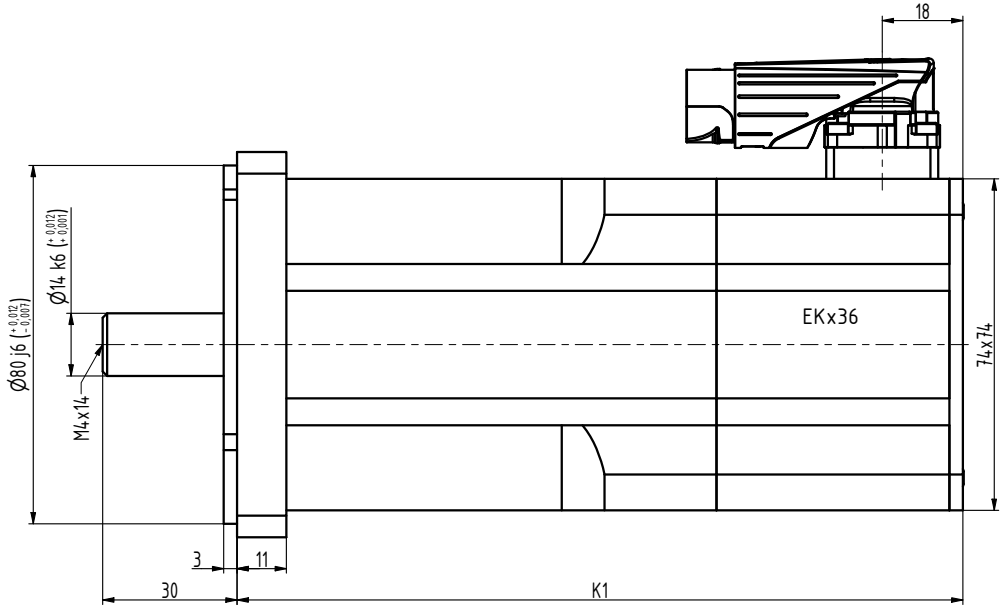

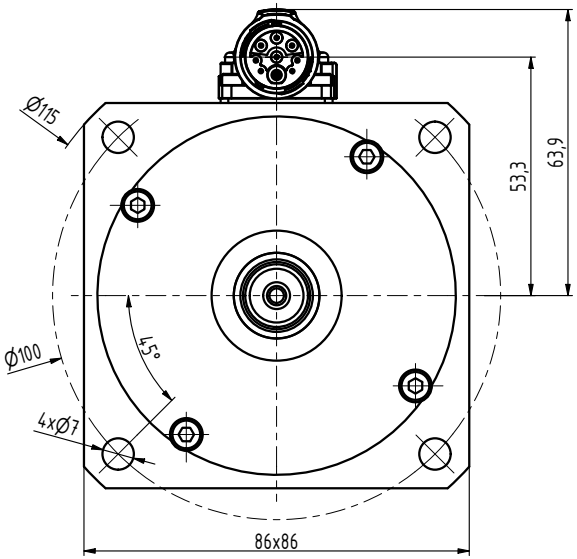

TYP	K1
N3-0115	144
N3-0205	162
N3-0280	180
N3-0350	198
N3-0420	216
N3-0480	234

INDEX	ZMĚNA	DATUM	PODPIS

ZN.MAT.		T.O.	HMOTNOST kg	MĚŘ.
ROZM.-POLOT.				
POM. ZAŘ.			ČSN	TŘ.Č.
VYPR. Ošlejšek	NORM.REF.		POZN.	Č. KUSOVNÍKU
PŘEKR. Ošlejšek 31.05.2021				
TECHNOL.	SCHVÁLIL Ošlejšek	13.08.2015	STARÝ V.	Č.V.

NÁZEV
Motor N3

N3119 10 B Z_I_S1

Listů List