| Engineering data (WIN 726) | | |
|---|---|---|
| DC bus voltage | 560 | V DC |
| Nominal AC voltage | 380 | V AC (rms) |
| Rated voltage | 265 | V AC (rms) |
| Rated power | 872 | W |
| Rated speed | 4500 | rpm |
| Rated torque | 1.85 | Nm |
| Rated current | 2.56 | A (rms) |
| Peak torque | 6.15 | Nm |
| Peak current | 9.1 | A (rms) |
| Stall torque | 2.05 | Nm |
| Stall current | 2.25 | A (rms) |
| No load speed | 6880 | rpm |
| EMF constant ±10% | 55 | V AC (rms) / 1000rpm |
| Theoretical torque constant ±10% | 0.91 | Nm / A (rms) |
| Torque constant ±10% @ rated load | 0.72 | Nm / A (rms) |
| Number of poles | 10 | |
| Electrical time constant | 2.51 | ms |
| Winding terminal resistance | 8.2 | Ω |
| Rotary field terminal inductance | 20.6 | mH |

| Customs info | |
|---|---|
| HS Code | 85015220 |

| Mechanical data (setting 48) | | |
|---|---|---|
| Max mechanical speed | 12000 | rpm |
| Mech. time constant | 0.94 | ms |
| Thermal time constant | 23 | min |
| Rotor inertia | 0.55 | kgcm² |
| Protection | IP64 | |
| Color | RAL 9005 | |
| Cooling | Convection | |
| Motor-only mass | 2.5 | kg |
| Max. axial force 20kh | 56 | N |
| Max. radial force 20kh* | 293 | N |
| Max. axial force 100kh | 33 | N |
| Max. radial force 100kh* | 171 | N |

** Defined for point of action at ½ output shaft length*

| Sensors | |
|---|---|
| Temperature | PT1000 {PT1000} |
| Feedback | EKM36 (HDSL) multi-turn, 18+12 bits, SIL2 |

| Brake | | |
|---|---|---|
| Braking torque | 4.50 | Nm |
| Voltage | 24 | V DC |
| Power @20°C | 12.0 | W |
| Current @20°C | 0.50 | A |
| Inertia | 0.20 | kgcm² |
| Mass | 0.47 | kg |

Torque / speed curve

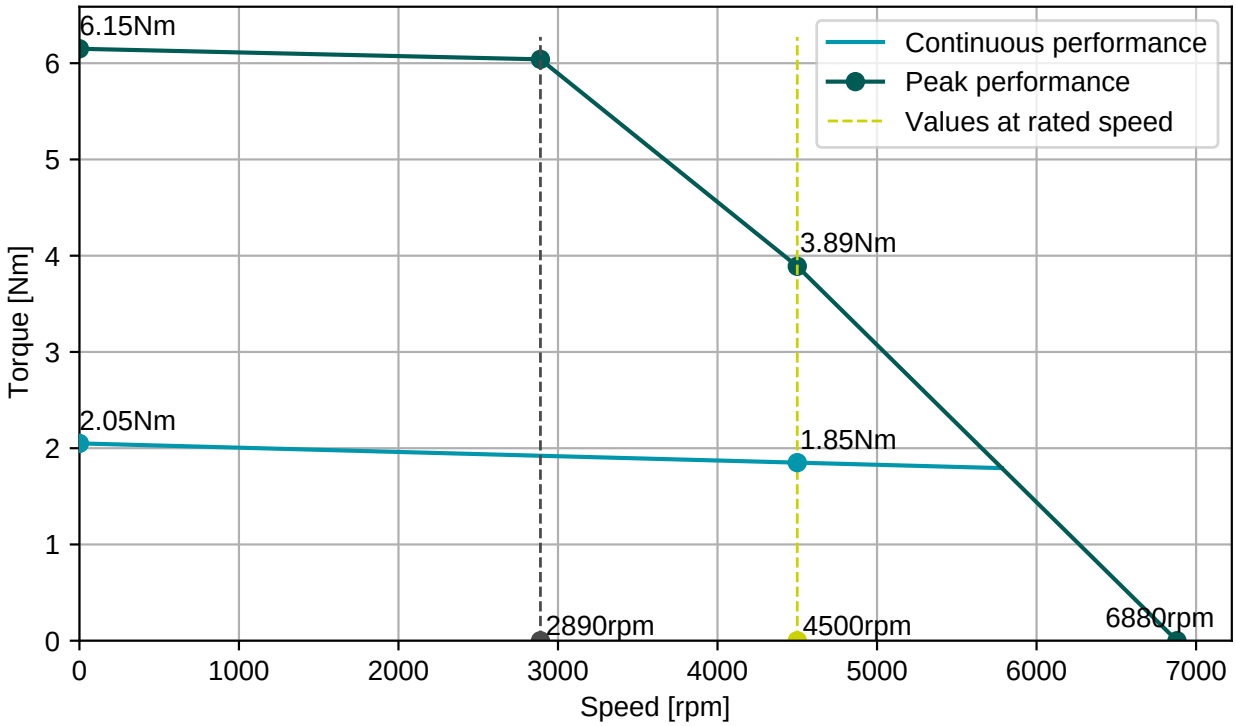


**EGA201N00000800000**

M15, 9 poles, rotary

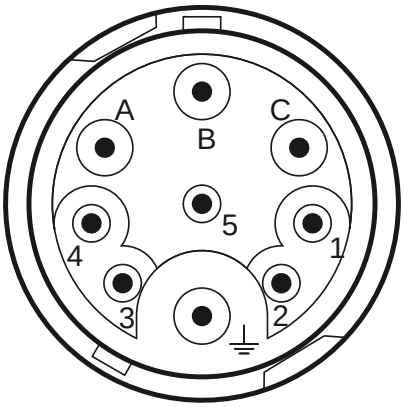


| Connector 1 (304) | |
|---|---|
| **A** | U |
| **B** | V |
| **C** | W |
| **PE** | PE |
| **1** | Brake+ |
| **2** | Brake- |
| **3** | +Us/DSL+ |
| **4** | GND/DSL- |

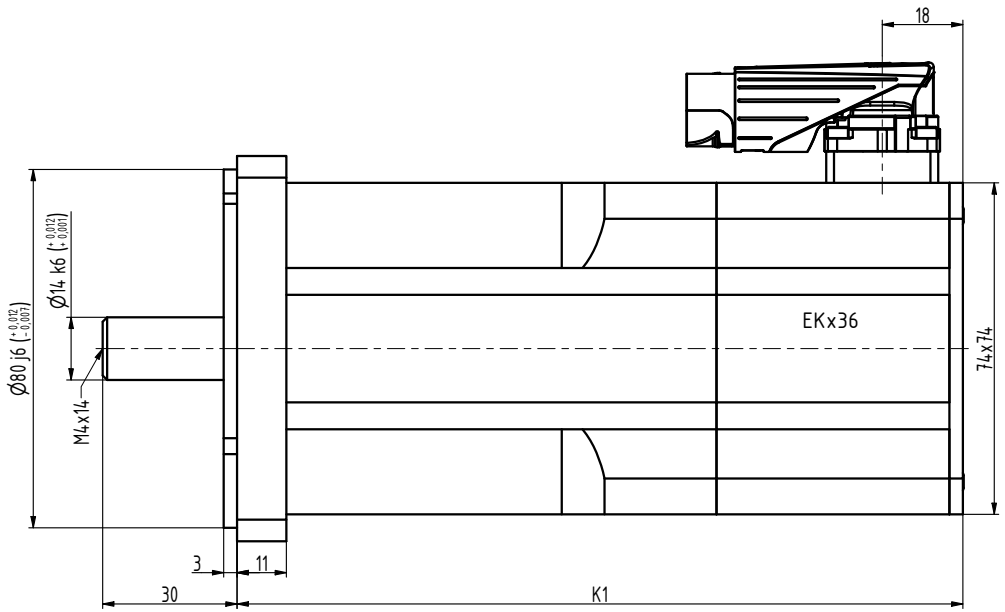


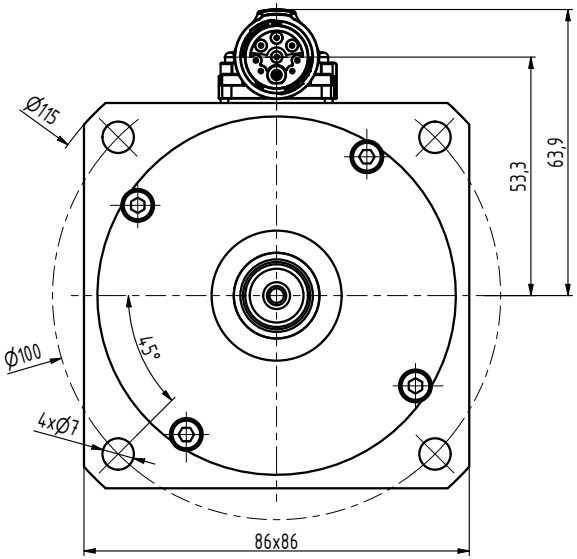


| TYP | K1 |
|---|---|
| N3-0115 | 144 |
| N3-0205 | 162 |
| N3-0280 | 180 |
| N3-0350 | 198 |
| N3-0420 | 216 |
| N3-0480 | 234 |

| INDEX | ZMĚNA | DATUM | PODPIS | | |
|---|---|---|---|---|---|
| ZN.MAT. | | | T.O. | HMOTNOST kg | MĚŘ. |
| ROZM.-POLOT. | | | | | |
| POM. ZAŘ. | | | | ČSN | TŘ.Č. |
| VYPR. Ošlejšek | | NORM.REF. | | POZN. | Č. KUSOVNÍKU |
| PŘEKR. Ošlejšek 31.05.2021 | | | | | |
| TECHNOL. | | SCHVÁLIL Ošlejšek | 13.08.2015 | STARÝ V. | Č.V. |

NÁZEV
Motor N3

N3119 10 B Z_I_S1

Listů List