Engineering data (WIN 960)		
DC bus voltage	320	V DC
Nominal AC voltage	220	V AC (rms)
Rated voltage	154	V AC (rms)
Rated power	518	W
Rated speed	4500	rpm
Rated torque	1.10	Nm
Rated current	2.94	A (rms)
Peak torque	3.45	Nm
Peak current	11.1	A (rms)
Stall torque	1.15	Nm
Stall current	2.53	A (rms)
No load speed	7940	rpm
EMF constant ±10%	27.5	V AC (rms) / 1000rpm
Theoretical torque constant ±10%	0.45	Nm / A (rms)
Torque constant ±10% @ rated load	0.37	Nm / A (rms)
Number of poles	10	
Electrical time constant	2.23	ms
Winding terminal resistance	5.37	Ω
Rotary field terminal inductance	12	mH

Customs info	
HS Code	85015100

Mechanical data (setting 48)		
Max mechanical speed	12000	rpm
Mech. time constant	1.39	ms
Thermal time constant	21	min
Rotor inertia	0.31	kgcm²
Protection	IP64	
Color	RAL 9005	
Cooling	Convection	
Motor-only mass	1.5	kg
Max. axial force 20kh	47	N
Max. radial force 20kh*	247	N
Max. axial force 100kh	27	N
Max. radial force 100kh*	145	N

** Defined for point of action at ½ output shaft length*

Sensors	
Temperature	PT1000 {PT1000}
Feedback	EDS35 (HDSL) single-turn, 24 bits

Torque / speed curve

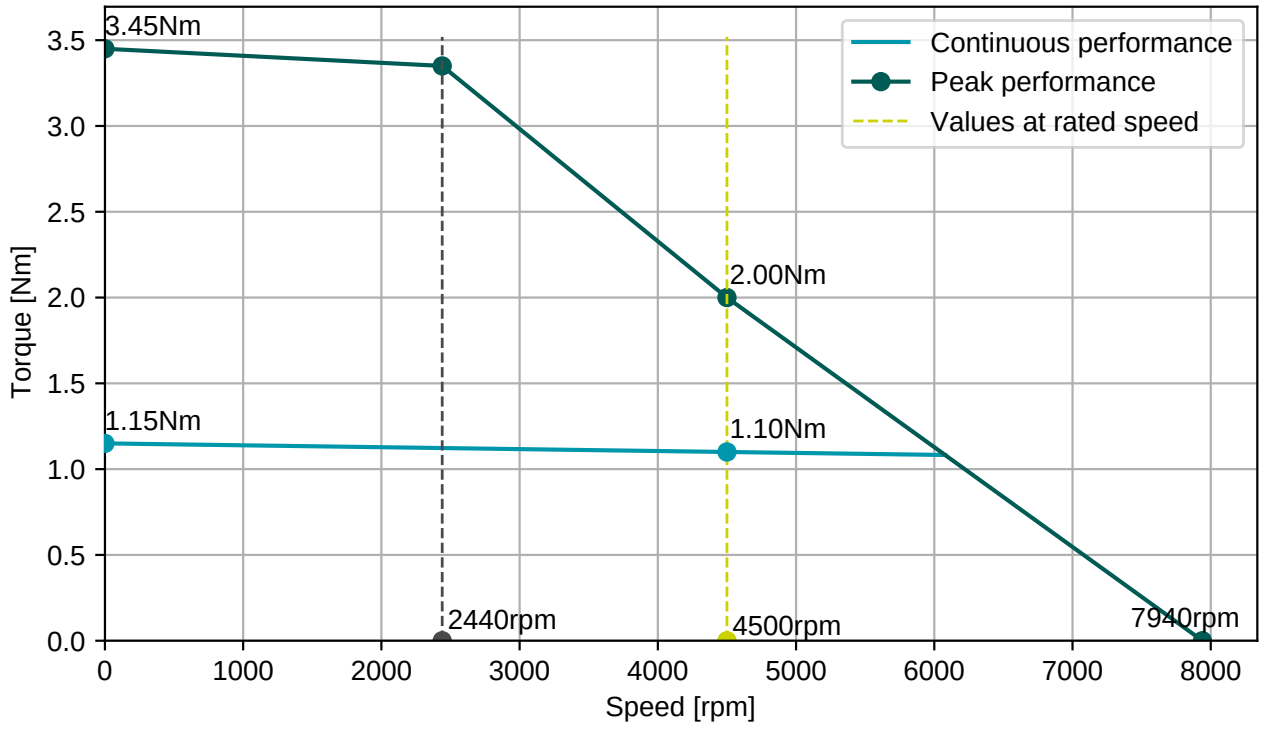

EGA201N00000800000

M15, 9 poles, rotary

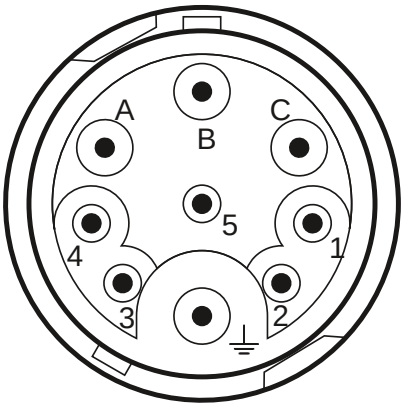

Connector 1 (304)	
A	U
B	V
C	W
PE	PE
1	Brake+
2	Brake-
3	+Us/DSL+
4	GND/DSL-

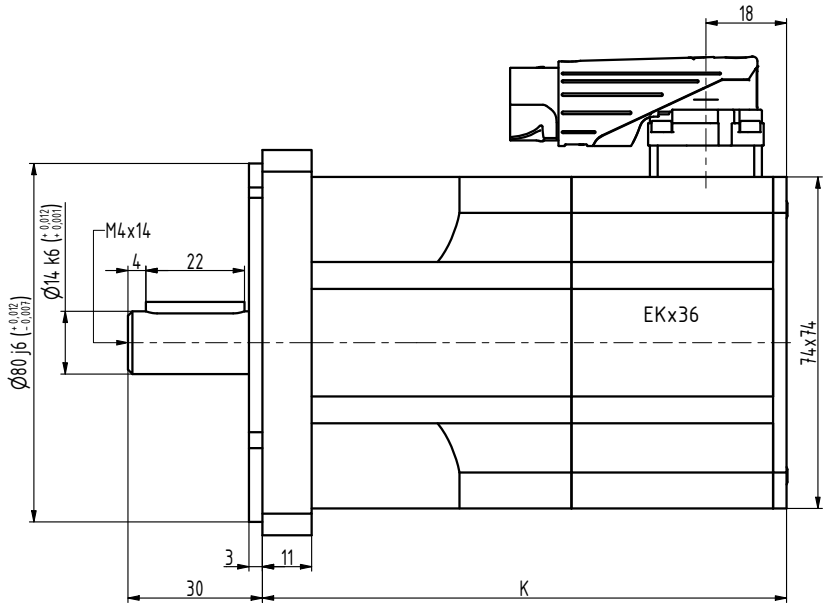

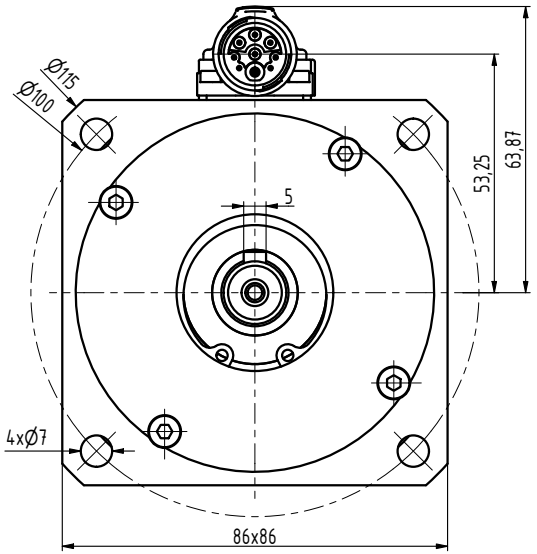

TYP	K
N3-0115	99
N3-0205	117
N3-0280	135
N3-0350	153
N3-0420	171
N3-0480	189

INDEX	ZMĚNA	DATUM	PODPIS		
ZN.MAT.			T.O.	HMOTNOST kg	MĚŘ.
ROZM.-POLOT.					
POM. ZAŘ.				ČSN	TŘ.Č.
VYPR. Ošlejšek		NORM.REF.		POZN.	Č. KUSOVNÍKU
PŘEKR. Šimík 22.10.2018					
TECHNOL.		SCHVÁLIL Ošlejšek	11.03.2014	STARÝ V.	Č.V.
NÁZEV					
Motor N3				N3119 10 P Z	
				Listů	List