Engineering data (WIN 707)		
DC bus voltage	560	V DC
Nominal AC voltage	380	V AC (rms)
Rated voltage	278	V AC (rms)
Rated power	942	W
Rated speed	3000	rpm
Rated torque	3.00	Nm
Rated current	2.42	A (rms)
Peak torque	10.5	Nm
Peak current	10.9	A (rms)
Stall torque	3.5	Nm
Stall current	2.38	A (rms)
No load speed	4260	rpm
EMF constant ±10%	89	V AC (rms) / 1000rpm
Theoretical torque constant ±10%	1.47	Nm / A (rms)
Torque constant ±10% @ rated load	1.24	Nm / A (rms)
Number of poles	10	
Electrical time constant	2.87	ms
Winding terminal resistance	8.89	Ω
Rotary field terminal inductance	25.5	mH

Customs info	
HS Code	85015220

Mechanical data (setting 48)		
Max mechanical speed	12000	rpm
Mech. time constant	0.74	ms
Thermal time constant	27	min
Rotor inertia	1.04	kgcm²
Protection	IP64	
Color	RAL 9005	
Cooling	Convection	
Motor-only mass	3	kg
Max. axial force 20kh	68	N
Max. radial force 20kh*	360	N
Max. axial force 100kh	40	N
Max. radial force 100kh*	211	N

** Defined for point of action at ½ output shaft length*

Sensors	
Temperature	PT1000 {PT1000}
Feedback	EEM37 (HDSL) multi-turn, 17+12 bits

Brake		
Braking torque	4.50	Nm
Voltage	24	V DC
Power @20°C	12.0	W
Current @20°C	0.50	A
Inertia	0.20	kgcm²
Mass	0.47	kg

Torque / speed curve

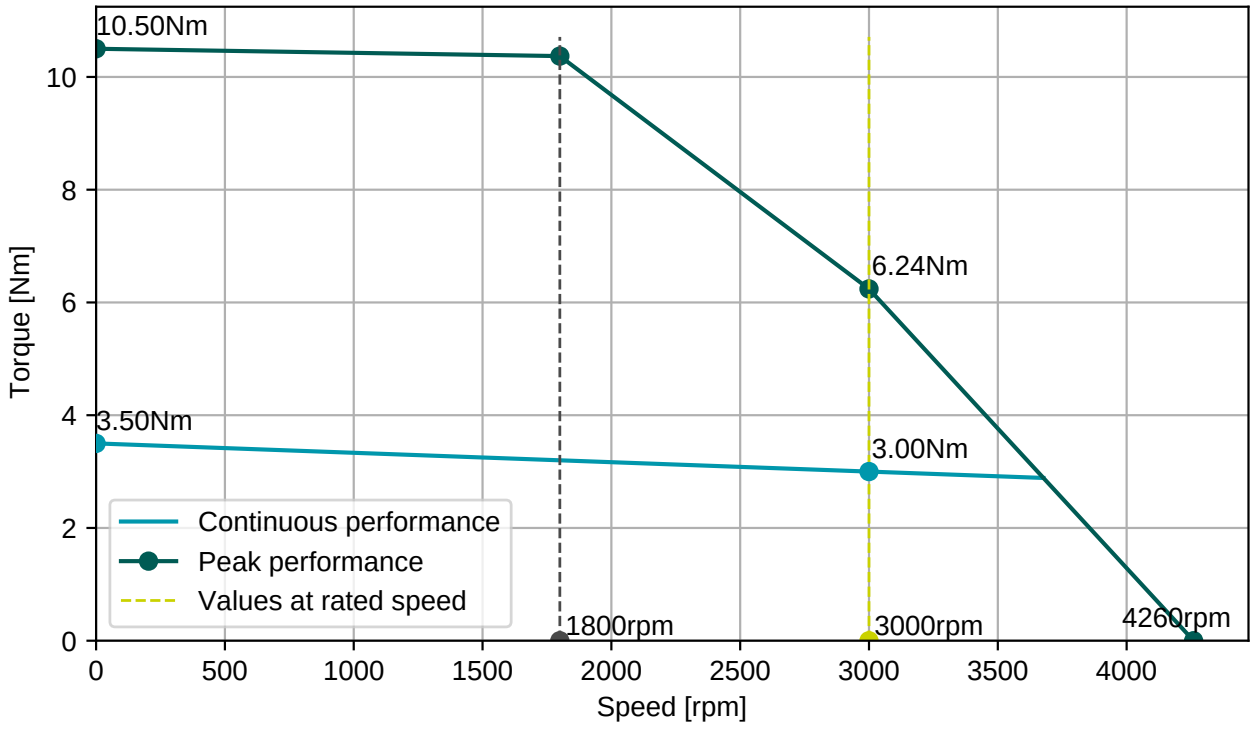

BGC110N00001216000

M23, 8 poles, rotary

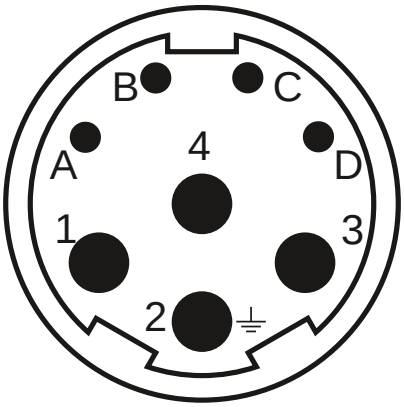

Connector 1 (283)	
1	U
4	V
3	W
2	PE
A	Brake+
B	Brake-
C	GND/DSL-
D	+Us/DSL+

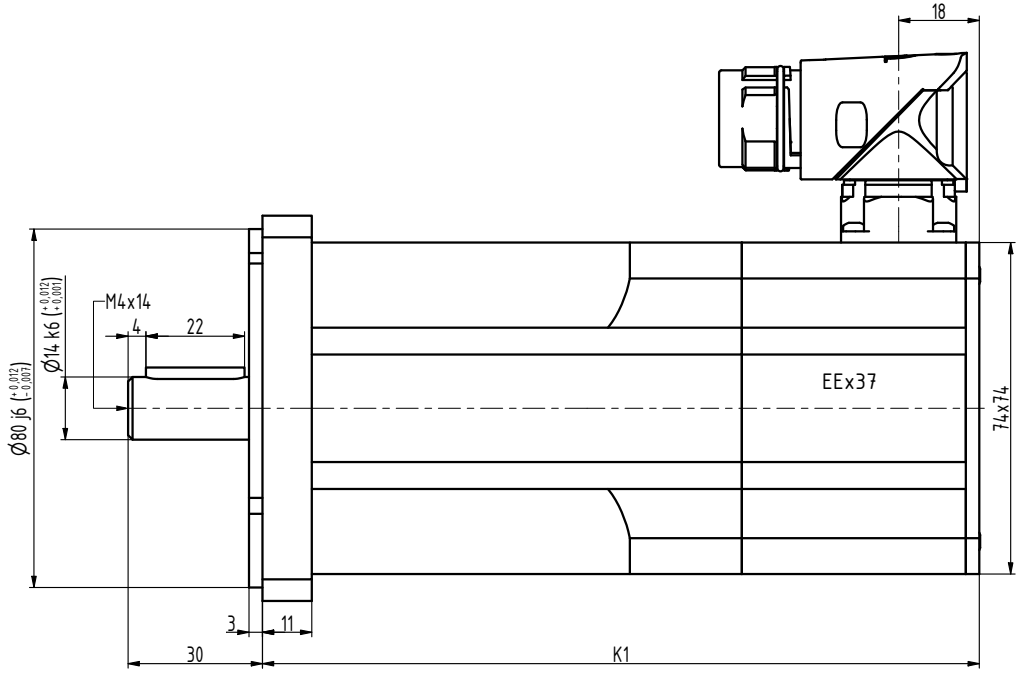

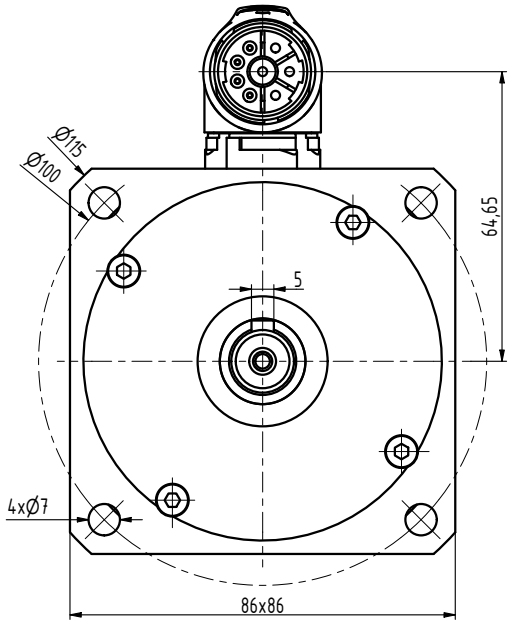

TYP	K1
N3-0115	142
N3-0205	160
N3-0280	178
N3-0350	196
N3-0420	214
N3-0480	232

INDEX	ZMĚNA	DATUM	PODPIS		
ZN.MAT.			T.O.	HMOTNOST kg	MĚŘ.
ROZM.-POLOT.					
POM. ZAŘ.				ČSN	TŘ.Č.
VYPR. Šimík		NORM.REF.		POZN.	Č. KUSOVNÍKU
PŘEKR. Šimík 26.10.2018					
TECHNOL.		SCHVÁLIL Ošlejšek	25.10.2018	STARÝ V.	Č.V.
NÁZEV	Motor N3			N3133 03 BP Z	
				Listů	List