Engineering data (WIN 704)		
DC bus voltage	320	V DC
Nominal AC voltage	220	V AC (rms)
Rated voltage	153	V AC (rms)
Rated power	597	W
Rated speed	3000	rpm
Rated torque	1.90	Nm
Rated current	3.06	A (rms)
Peak torque	6.15	Nm
Peak current	12.7	A (rms)
Stall torque	2.05	Nm
Stall current	2.79	A (rms)
No load speed	4920	rpm
EMF constant ±10%	44.5	V AC (rms) / 1000rpm
Theoretical torque constant ±10%	0.74	Nm / A (rms)
Torque constant ±10% @ rated load	0.62	Nm / A (rms)
Number of poles	10	
Electrical time constant	2.53	ms
Winding terminal resistance	5.26	Ω
Rotary field terminal inductance	13.3	mH

Customs info	
HS Code	85015100

Mechanical data (setting 48)		
Max mechanical speed	12000	rpm
Mech. time constant	0.92	ms
Thermal time constant	23	min
Rotor inertia	0.55	kgcm²
Protection	IP64	
Color	RAL 9005	
Cooling	Convection	
Motor-only mass	2	kg
Max. axial force 20kh	62	N
Max. radial force 20kh*	327	N
Max. axial force 100kh	36	N
Max. radial force 100kh*	191	N

** Defined for point of action at ½ output shaft length*

Sensors	
Temperature	PT1000 {PT1000}
Feedback	EEM37 (HDSL) multi-turn, 17+12 bits

Torque / speed curve

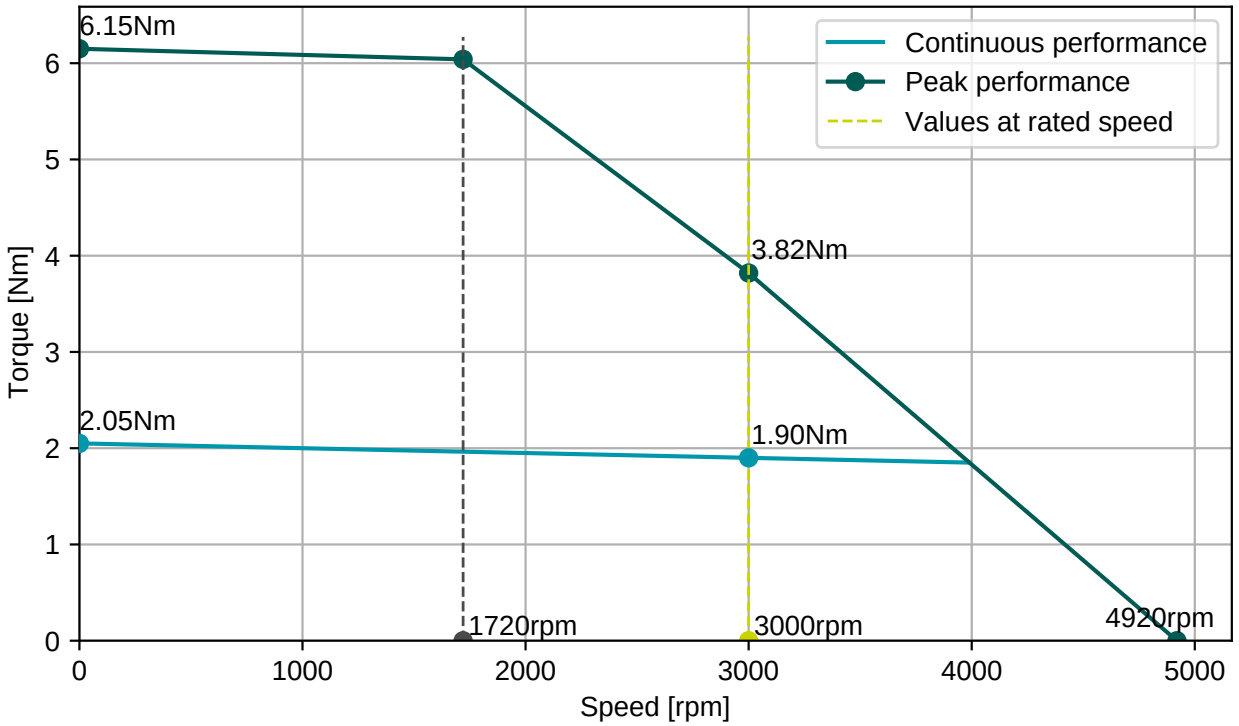

BGC110N00001216000

M23, 8 poles, rotary

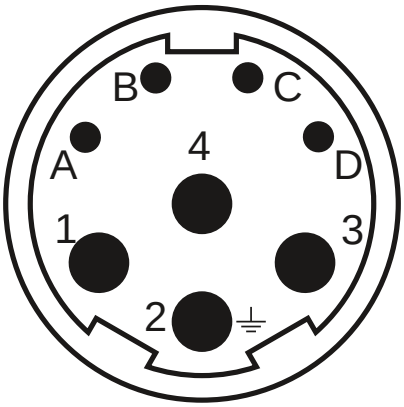

Connector 1 (283)	
1	U
4	V
3	W
2	PE
A	Brake+
B	Brake-
C	GND/DSL-
D	+Us/DSL+

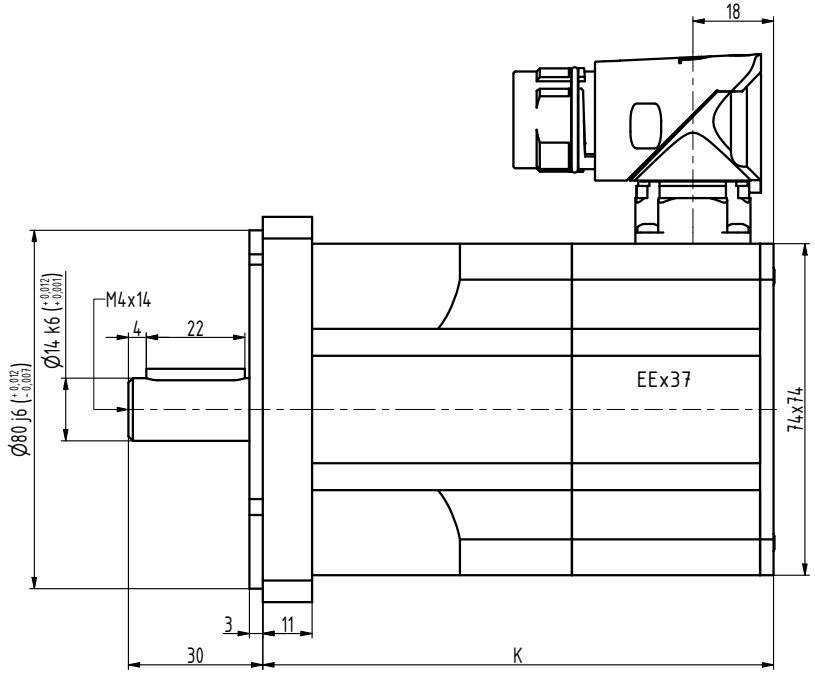

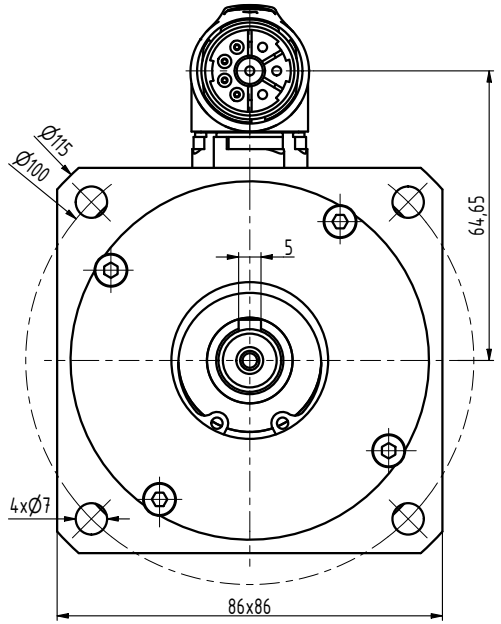

TYP	K
N3-0115	96
N3-0205	114
N3-0280	132
N3-0350	150
N3-0420	168
N3-0480	186

INDEX	ZMĚNA	DATUM	PODPIS

ZN.MAT.		T.O.	HMOTNOST kg	MĚŘ.	
ROZM.-POLOT.					
POM. ZAŘ.			ČSN	TŘ.Č.	
VYPR. Šimík	NORM.REF.		POZN.	Č. KUSOVNÍKU	
PŘEKR. Šimík 24.10.2018					
TECHNOL.	SCHVÁLIL Ošlejšek	29.03.2018	STARÝ V.	Č.V.	

NÁZEV
Motor N3

N3133 03 P Z

Listů List