Engineering data (WIN 783)		
DC bus voltage	36	V DC
Nominal AC voltage	25	V AC (rms)
Rated voltage	18	V AC (rms)
Rated power	209	W
Rated speed	1000	rpm
Rated torque	2.00	Nm
Rated current	11.02	A (rms)
Peak torque	6.15	Nm
Peak current	41.9	A (rms)
Stall torque	2.05	Nm
Stall current	10.3	A (rms)
No load speed	2060	rpm
EMF constant ±10%	12	V AC (rms) / 1000rpm
Theoretical torque constant ±10%	0.2	Nm / A (rms)
Torque constant ±10% @ rated load	0.2	Nm / A (rms)
Number of poles	10	
Electrical time constant	2.44	ms
Winding terminal resistance	0.41	Ω
Rotary field terminal inductance	1	mH

Customs info	
HS Code	85015100

Mechanical data (setting 48)		
Max mechanical speed	12000	rpm
Mech. time constant	0.99	ms
Thermal time constant	23	min
Rotor inertia	0.55	kgcm²
Protection	IP64	
Color	RAL 9005	
Cooling	Convection	
Motor-only mass	2	kg
Max. axial force 20kh	90	N
Max. radial force 20kh*	472	N
Max. axial force 100kh	52	N
Max. radial force 100kh*	276	N

** Defined for point of action at ½ output shaft length*

Sensors	
Temperature	PT1000 {PT1000}
Feedback	EKM36 (HDSL) multi-turn, 17 + 12 bits

Torque / speed curve

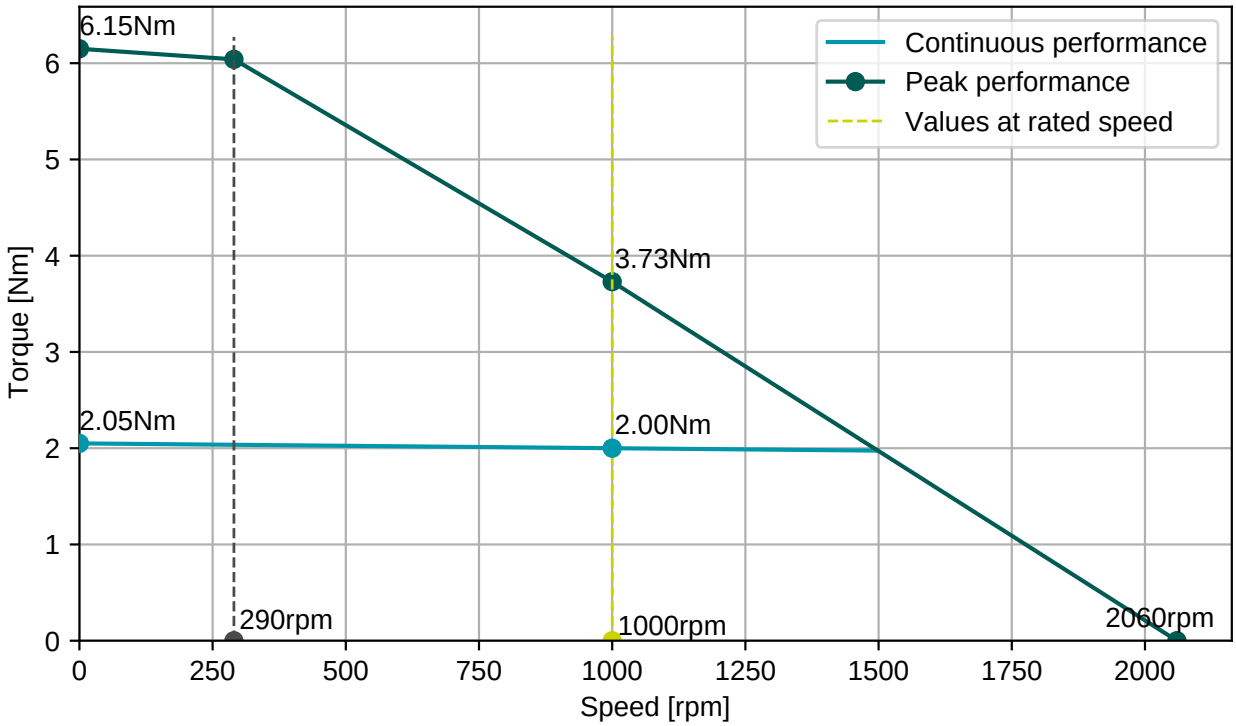

BGC110N00001216000

M23, 8 poles, rotary

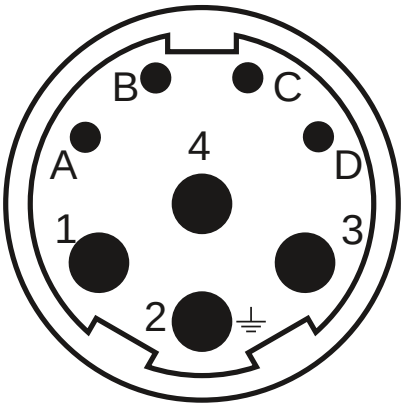

Connector 1 (283)	
1	U
4	V
3	W
2	PE
A	Brake+
B	Brake-
C	GND/DSL-
D	+Us/DSL+

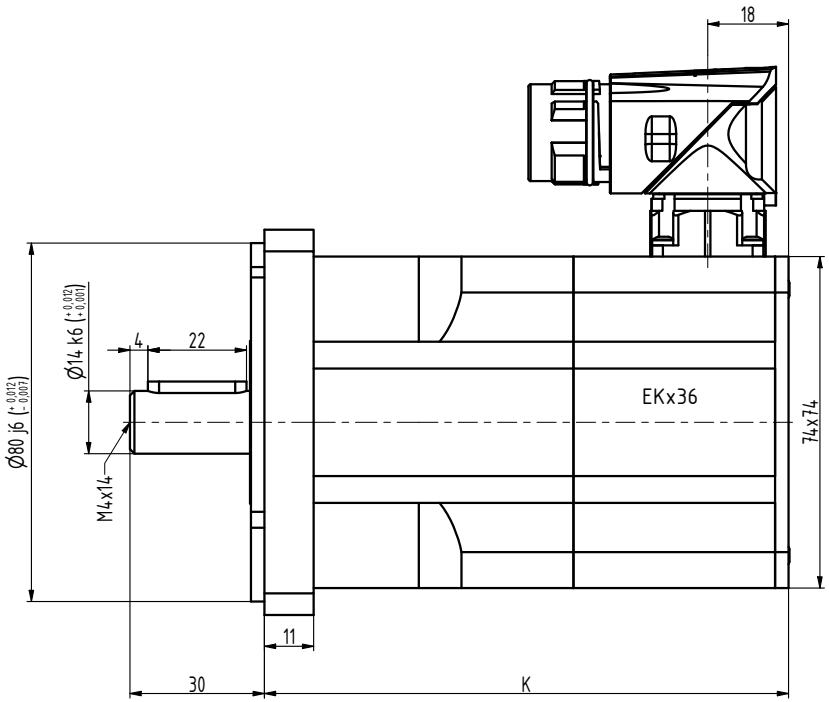

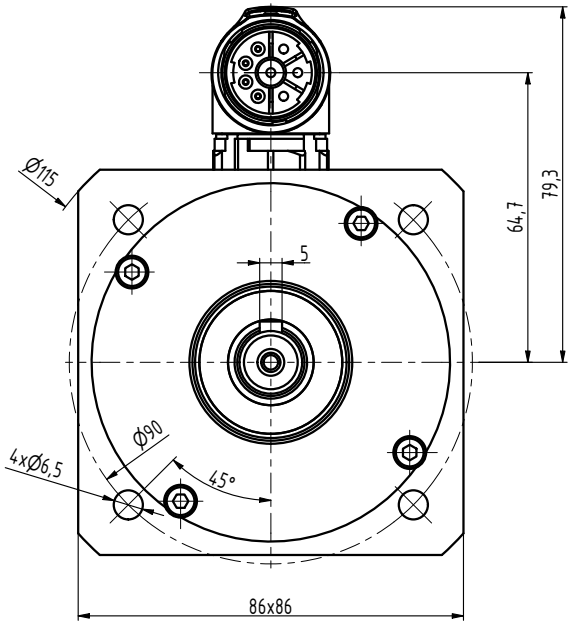

TYP	K
N3-0115	99
N3-0205	117
N3-0280	135
N3-0350	153
N3-0420	171
N3-0480	189

INDEX	ZMĚNA	DATUM	PODPIS		
ZN.MAT.			T.O.	HMOTNOST kg	MĚŘ.
ROZM.-POLOT.					
POM. ZAŘ.				ČSN	TŘ.Č.
VYPR. Ošlejšek		NORM.REF.		POZN.	Č. KUSOVNÍKU
PŘEKR. Ošlejšek 30.5.2021					
TECHNOL.		SCHVÁLIL Ošlejšek	27.10.2017	STARÝ V.	Č.V.

NÁZEV
Motor N3

N3119 06 P Z_S4_S1

Listů List