Engineering data (WIN 787)		
DC bus voltage	560	V DC
Nominal AC voltage	380	V AC (rms)
Rated voltage	274	V AC (rms)
Rated power	401	W
Rated speed	4500	rpm
Rated torque	0.85	Nm
Rated current	1.07	A (rms)
Peak torque	3.8	Nm
Peak current	5.3	A (rms)
Stall torque	0.95	Nm
Stall current	1.15	A (rms)
No load speed	7560	rpm
EMF constant ±10%	50	V AC (rms) / 1000rpm
Theoretical torque constant ±10%	0.83	Nm / A (rms)
Torque constant ±10% @ rated load	0.79	Nm / A (rms)
Number of poles	6	
Electrical time constant	1.44	ms
Winding terminal resistance	33.57	Ω
Rotary field terminal inductance	48.5	mH

Customs info	
HS Code	85015100

Mechanical data (setting 48)		
Max mechanical speed	12000	rpm
Mech. time constant	0.93	ms
Thermal time constant	18	min
Rotor inertia	0.11	kgcm²
Protection	IP64	
Color	RAL 9005	
Cooling	Convection	
Motor-only mass	1.27	kg
Max. axial force 20kh	42	N
Max. radial force 20kh*	222	N
Max. axial force 100kh	25	N
Max. radial force 100kh*	130	N

** Defined for point of action at ½ output shaft length*

Sensors	
Temperature	PT1000 {PT1000}
Feedback	EKS36 (HDSL) single-turn, 18 bits, SIL2

Torque / speed curve

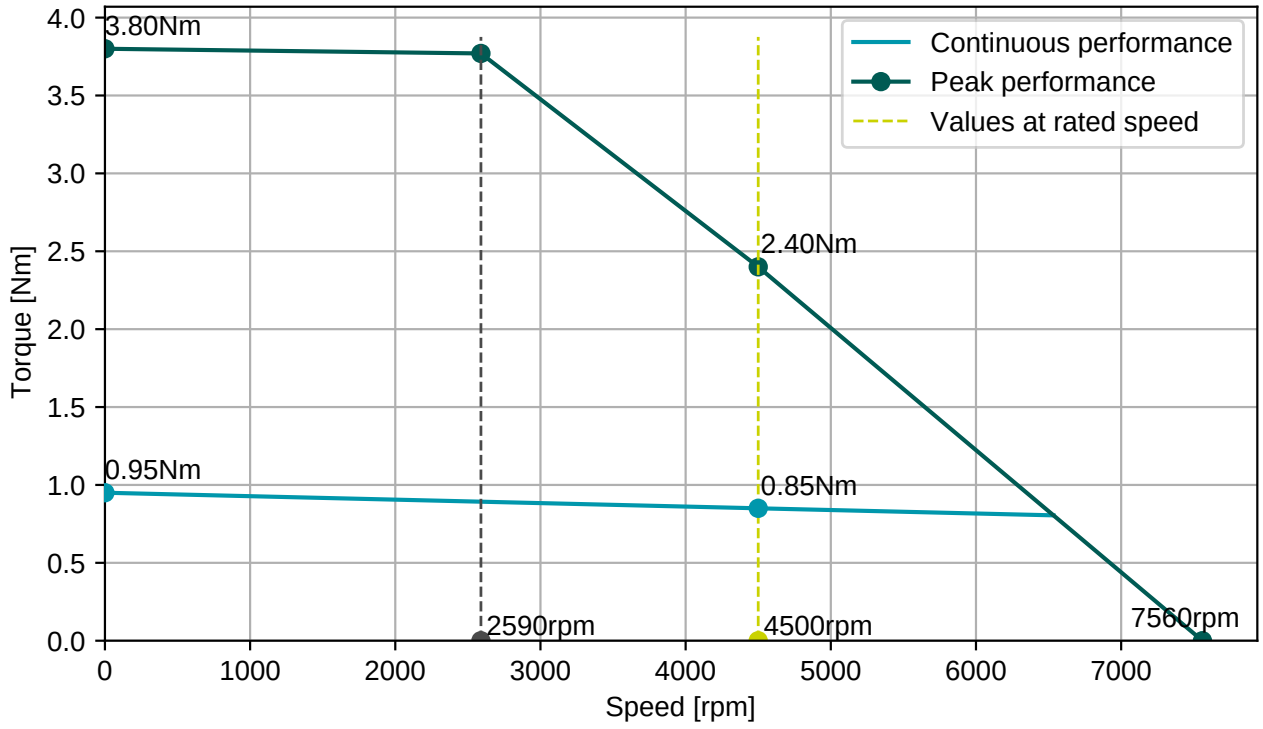

EGA201N00000800000

M15, 9 poles, rotary

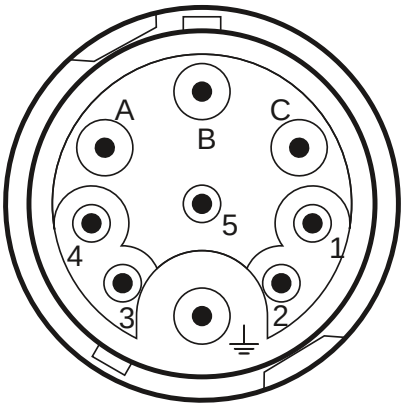

Connector 1 (304)	
A	U
B	V
C	W
PE	PE
1	Brake+
2	Brake-
3	+Us/DSL+
4	GND/DSL-

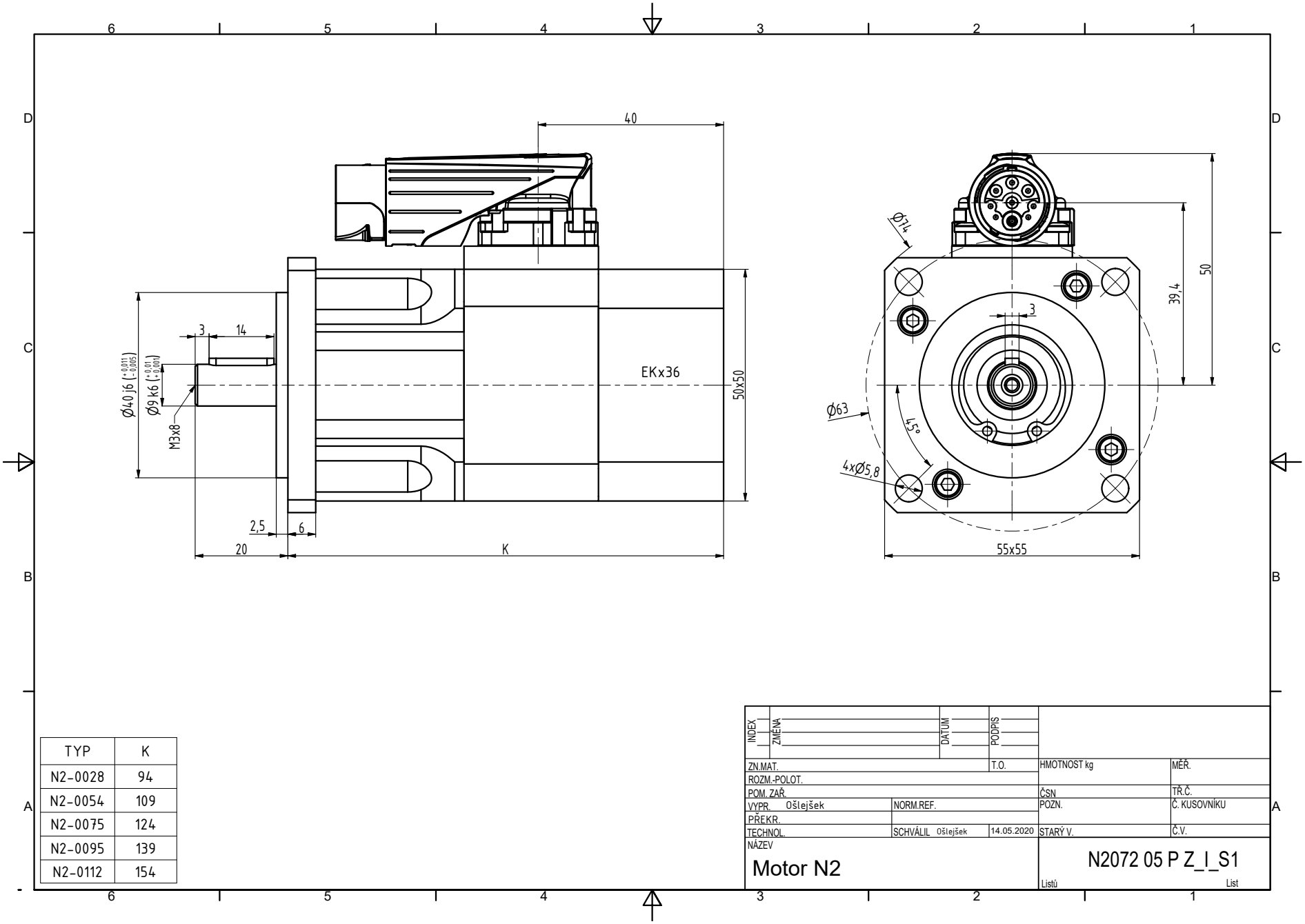

TYP	K
N2-0028	94
N2-0054	109
N2-0075	124
N2-0095	139
N2-0112	154

INDEX	ZMĚNA	DATUM	PODPIS		
ZN.MAT.			T.O.	HMOTNOST kg	MĚŘ.
ROZM.-POLOT.					
POM. ZAŘ.				ČSN	TŘ.Č.
VYPR. Ošlejšek	NORM.REF.			POZN.	Č. KUSOVNÍKU
PŘEKR.					
TECHNOL.	SCHVÁLIL Ošlejšek	14.05.2020		STARÝ V.	Č.V.

NÁZEV

Motor N2

N2072 05 P Z_I_S1

Listů List