Engineering data (WIN 1057)		
DC bus voltage	560	V DC
Nominal AC voltage	380	V AC (rms)
Rated voltage	258	V AC (rms)
Rated power	1.6	kW
Rated speed	6000	rpm
Rated torque	2.50	Nm
Rated current	4.12	A (rms)
Peak torque	14.4	Nm
Peak current	20	A (rms)
Stall torque	4.8	Nm
Stall current	5.6	A (rms)
No load speed	7300	rpm
EMF constant ±10%	52	V AC (rms) / 1000rpm
Theoretical torque constant ±10%	0.86	Nm / A (rms)
Torque constant ±10% @ rated load	0.61	Nm / A (rms)
Number of poles	10	
Electrical time constant	3.04	ms
Winding terminal resistance	1.91	Ω
Rotary field terminal inductance	5.8	mH

Customs info	
HS Code	85015220

Mechanical data (setting 48)		
Max mechanical speed	12000	rpm
Mech. time constant	0.68	ms
Thermal time constant	30	min
Rotor inertia	1.52	kgcm²
Protection	IP64	
Color	RAL 9005	
Cooling	Convection	
Motor-only mass	2	kg
Max. axial force 20kh	59	N
Max. radial force 20kh*	311	N
Max. axial force 100kh	35	N
Max. radial force 100kh*	182	N

** Defined for point of action at ½ output shaft length*

Sensors	
Temperature	PT1000 {PT1000}
Feedback	EDM35 (HDSL) multi-turn, 20+12 bits

Torque / speed curve

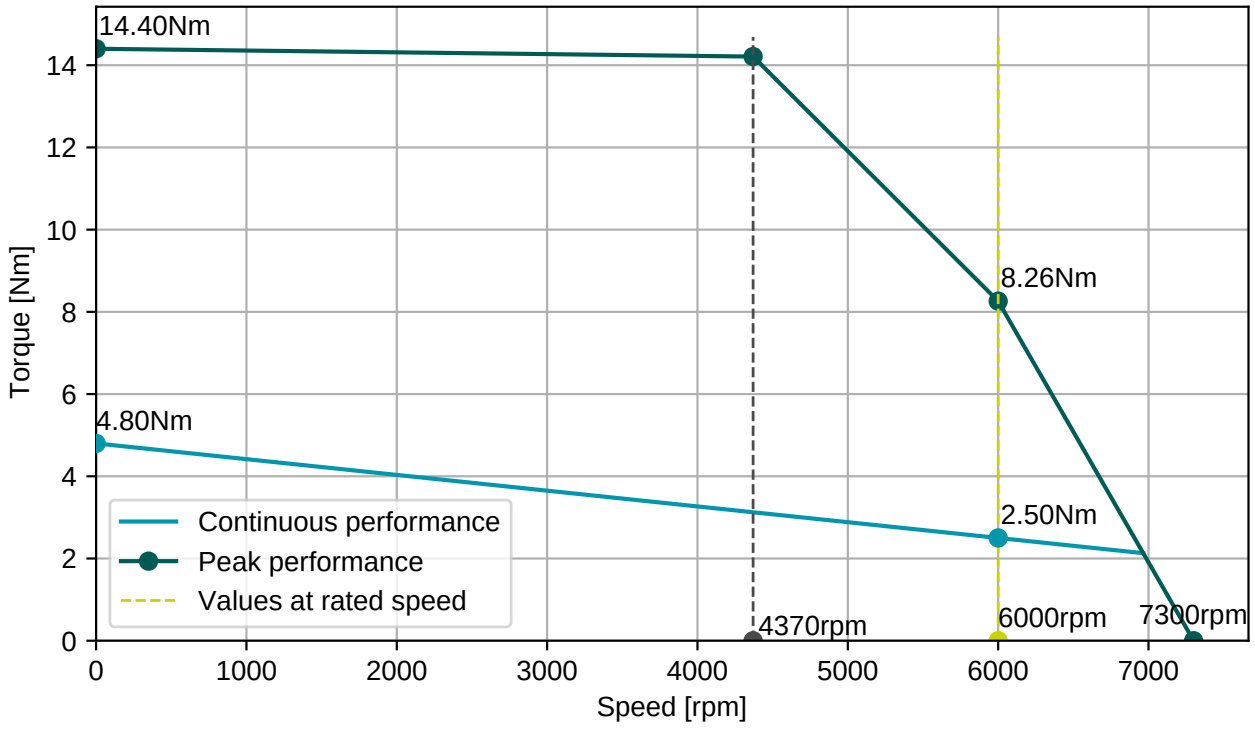

BGC110N00001216000

M23, 8 poles, rotary

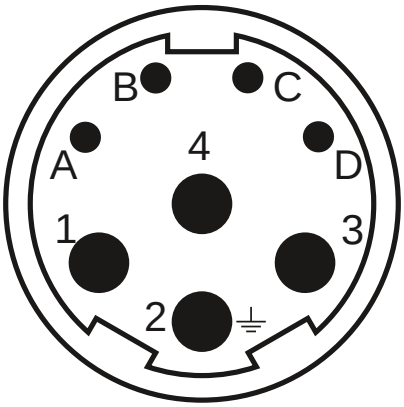

Connector 1 (283)	
1	U
4	V
3	W
2	PE
A	Brake+
B	Brake-
C	GND/DSL-
D	+Us/DSL+

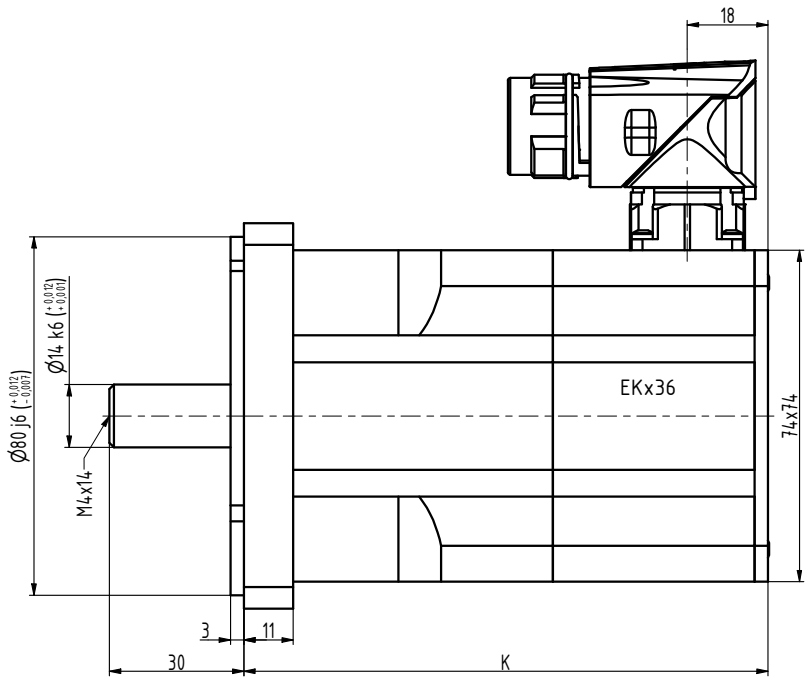

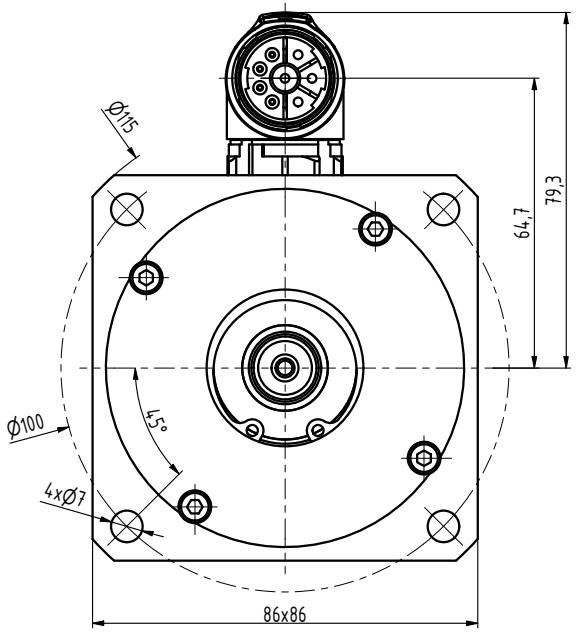

TYP	K
N3-0115	99
N3-0205	117
N3-0280	135
N3-0350	153
N3-0420	171
N3-0480	189

INDEX	ZMĚNA	DATUM	PODPIS		
ZN.MAT.			T.O.	HMOTNOST kg	MĚŘ.
ROZM.-POLOT.					
POM. ZAŘ.				ČSN	TŘ.Č.
VYPR. Ošlejšek		NORM.REF.		POZN.	Č. KUSOVNÍKU
PŘEKR. Ošlejšek 30.05.20201					
TECHNOL.		SCHVÁLIL Ošlejšek	27.10.2017	STARÝ V.	Č.V.
NÁZEV: Motor N3				N3119 06 Z_S4_S1	
				Listů	List