Engineering data (WIN 1163)		
DC bus voltage	48	V DC
Nominal AC voltage	33	V AC (rms)
Rated voltage	30	V AC (rms)
Rated power	421	W
Rated speed	1200	rpm
Rated torque	3.35	Nm
Rated current	11.05	A (rms)
Peak torque	10.5	Nm
Peak current	38.2	A (rms)
Stall torque	3.5	Nm
Stall current	10.6	A (rms)
No load speed	1640	rpm
EMF constant ±10%	20	V AC (rms) / 1000rpm
Theoretical torque constant ±10%	0.33	Nm / A (rms)
Torque constant ±10% @ rated load	0.30	Nm / A (rms)
Number of poles	10	
Electrical time constant	2.89	ms
Winding terminal resistance	0.45	Ω
Rotary field terminal inductance	1.3	mH

Customs info	
HS Code	85015100

Mechanical data (setting 48)		
Max mechanical speed	12000	rpm
Mech. time constant	0.74	ms
Thermal time constant	27	min
Rotor inertia	1.04	kgcm²
Protection	IP64	
Color	RAL 9005	
Cooling	Convection	
Motor-only mass	2	kg
Max. axial force 20kh	92	N
Max. radial force 20kh*	483	N
Max. axial force 100kh	54	N
Max. radial force 100kh*	283	N

** Defined for point of action at ½ output shaft length*

Sensors	
Temperature	PT1000 {PT1000}
Feedback	EKS36 (HDSL) single-turn, 18 bits, SIL2

Torque / speed curve

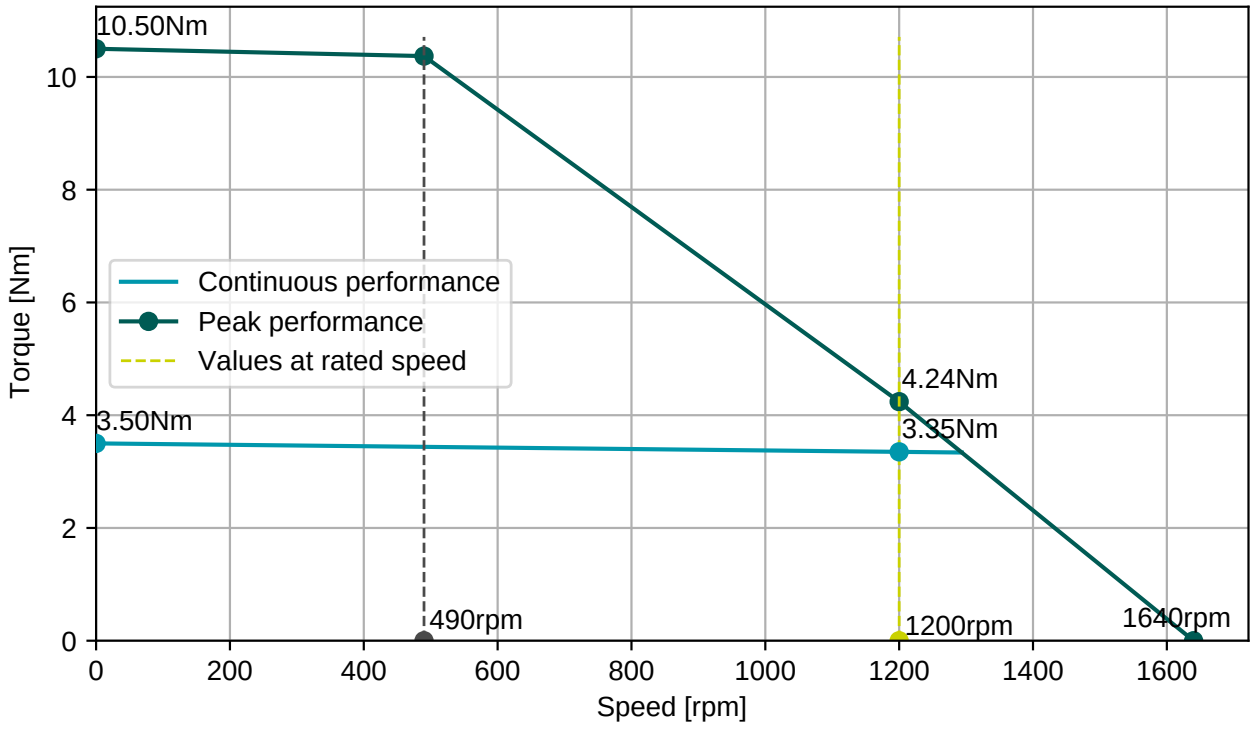

BGC110N00001216000

M23, 8 poles, rotary

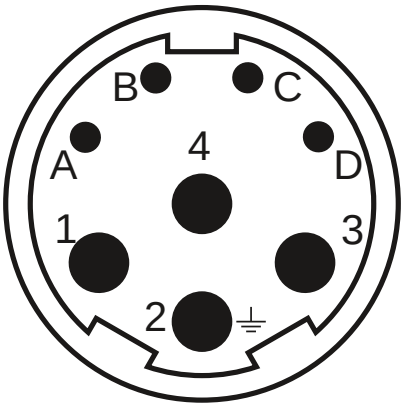

Connector 1 (283)	
1	U
4	V
3	W
2	PE
A	Brake+
B	Brake-
C	GND/DSL-
D	+Us/DSL+

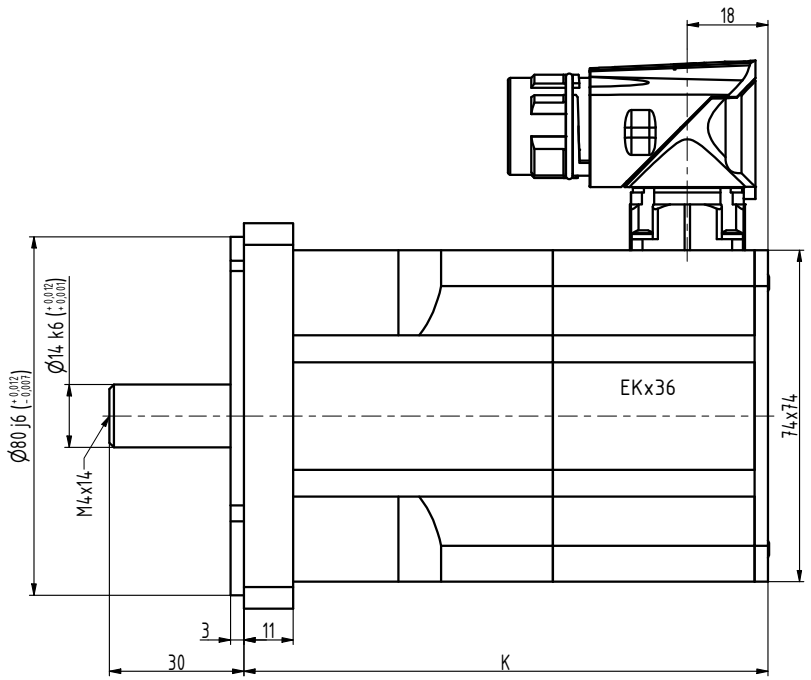

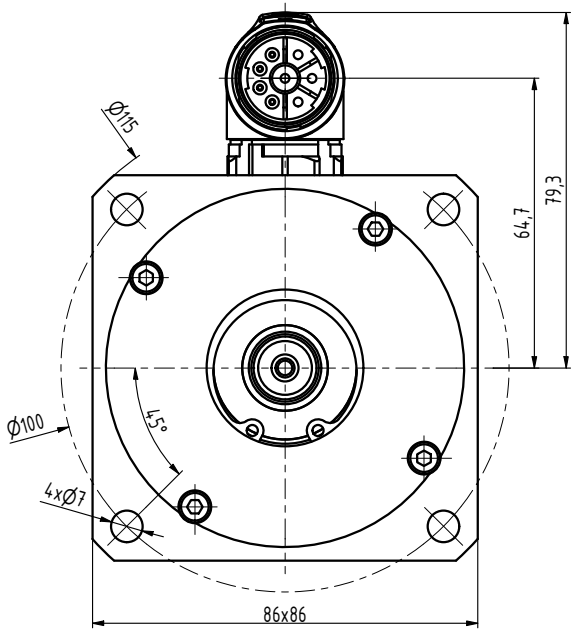

TYP	K
N3-0115	99
N3-0205	117
N3-0280	135
N3-0350	153
N3-0420	171
N3-0480	189

INDEX	ZMĚNA	DATUM	PODPIS		
ZN.MAT.			T.O.	HMOTNOST kg	MĚŘ.
ROZM.-POLOT.					
POM. ZAŘ.				ČSN	TŘ.Č.
VYPR. Ošlejšek		NORM.REF.		POZN.	Č. KUSOVNÍKU
PŘEKR. Ošlejšek 30.05.20201					
TECHNOL.		SCHVÁLIL Ošlejšek	27.10.2017	STARÝ V.	Č.V.
NÁZEV: Motor N3				N3119 06 Z_S4_S1	
				Listů	List