Engineering data (WIN 769)		
DC bus voltage	36	V DC
Nominal AC voltage	25	V AC (rms)
Rated voltage	19	V AC (rms)
Rated power	146	W
Rated speed	1500	rpm
Rated torque	0.93	Nm
Rated current	7.45	A (rms)
Peak torque	3.06	Nm
Peak current	25.3	A (rms)
Stall torque	0.95	Nm
Stall current	7.3	A (rms)
No load speed	3160	rpm
EMF constant ±10%	7.8	V AC (rms) / 1000rpm
Theoretical torque constant ±10%	0.13	Nm / A (rms)
Torque constant ±10% @ rated load	0.12	Nm / A (rms)
Number of poles	6	
Electrical time constant	1.36	ms
Winding terminal resistance	0.87	Ω
Rotary field terminal inductance	1.18	mH

Customs info	
HS Code	85015100

Mechanical data (setting 48)		
Max mechanical speed	12000	rpm
Mech. time constant	1.00	ms
Thermal time constant	18	min
Rotor inertia	0.11	kgcm²
Protection	IP64	
Color	RAL 9005	
Cooling	Convection	
Motor-only mass	1.7	kg
Max. axial force 20kh	63	N
Max. radial force 20kh*	332	N
Max. axial force 100kh	37	N
Max. radial force 100kh*	194	N

** Defined for point of action at ½ output shaft length*

Sensors	
Temperature	PT1000 {PT1000}
Feedback	EEM37 (HDSL) multi-turn, 17+12 bits

Brake		
Braking torque	2.00	Nm
Voltage	24	V DC
Power @20°C	11.0	W
Current @20°C	0.46	A
Inertia	0.08	kgcm²
Mass	0.20	kg

Torque / speed curve

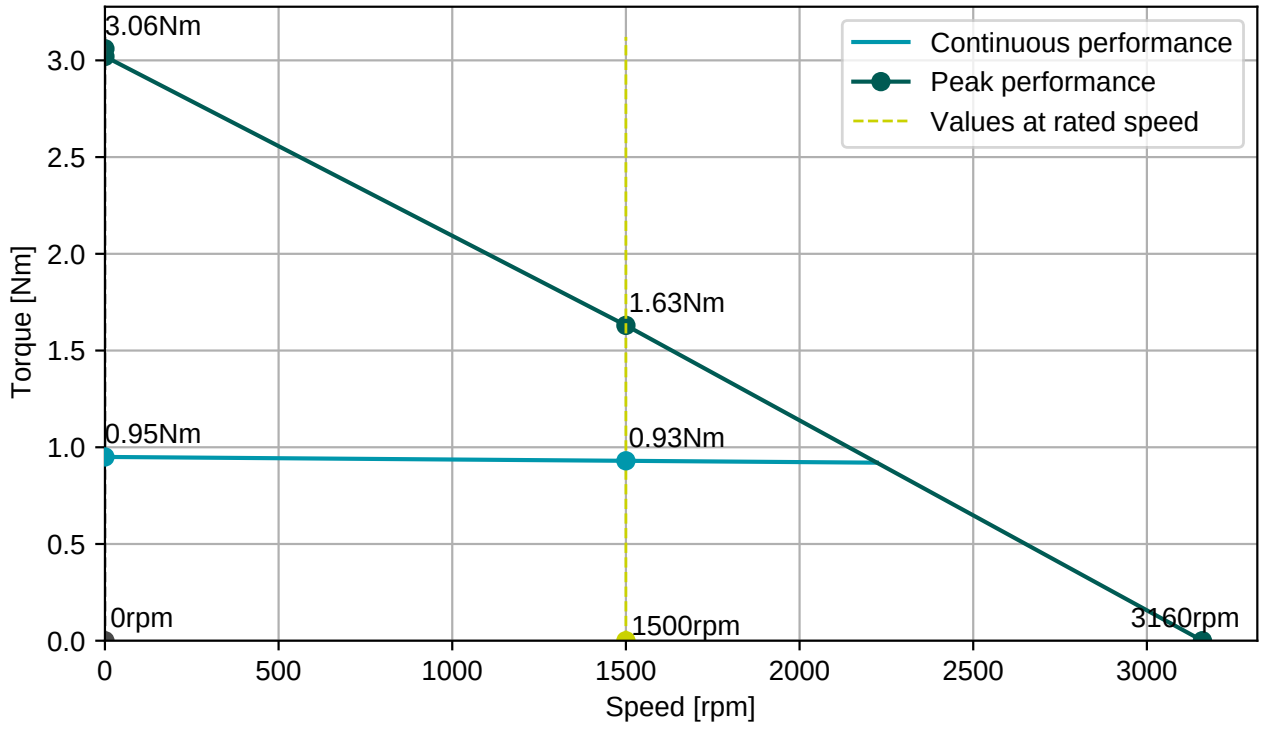

BGC110N00001216000

M23, 8 poles, rotary

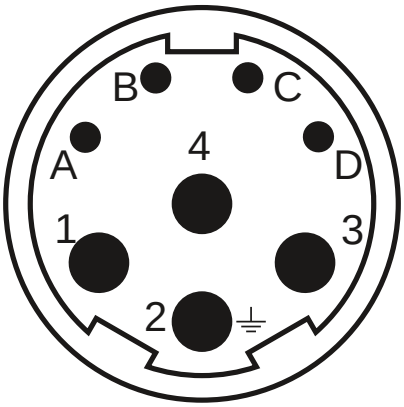

Connector 1 (283)	
1	U
4	V
3	W
2	PE
A	Brake+
B	Brake-
C	GND/DSL-
D	+Us/DSL+

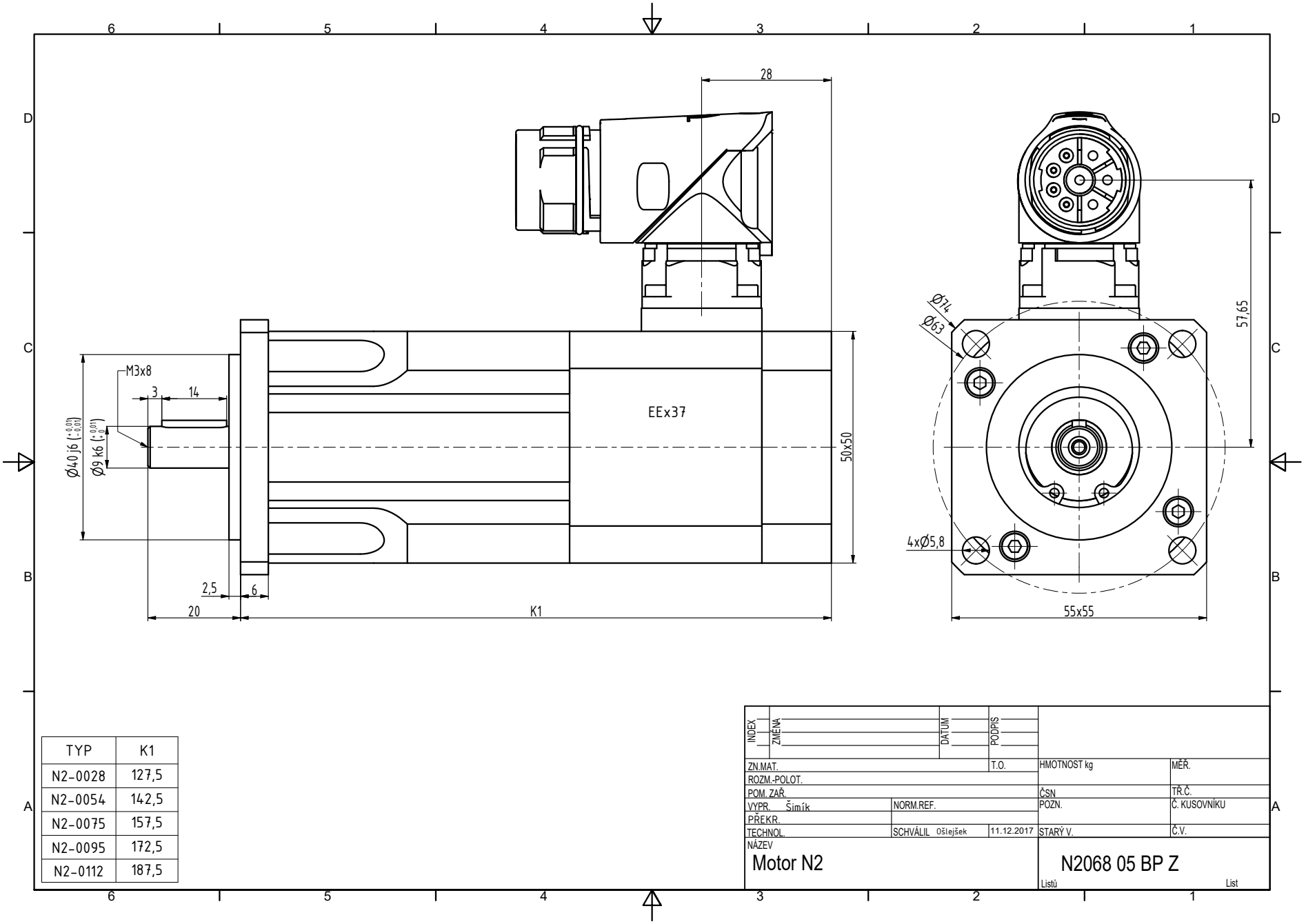

TYP	K1
N2-0028	127,5
N2-0054	142,5
N2-0075	157,5
N2-0095	172,5
N2-0112	187,5

INDEX	ZMĚNA	DATUM	PODPIS		
ZN.MAT.			T.O.	HMOTNOST kg	MĚŘ.
ROZM.-POLOT.					
POM. ZAŘ.				ČSN	TŘ.Č.
VYPR. Šimík		NORM.REF.		POZN.	Č. KUSOVNÍKU
PŘEKR.					
TECHNOL.		SCHVÁLIL Ošlejšek	11.12.2017	STARÝ V.	Č.V.

NÁZEV
Motor N2

N2068 05 BP Z

Listů List