| Engineering data (WIN 1035) | | |
|---|---|---|
| DC bus voltage | 48 | V DC |
| Nominal AC voltage | 33 | V AC (rms) |
| Rated voltage | 32 | V AC (rms) |
| Rated power | 286 | W |
| Rated speed | 3000 | rpm |
| Rated torque | 0.91 | Nm |
| Rated current | 7.31 | A (rms) |
| Peak torque | 3.77 | Nm |
| Peak current | 33.4 | A (rms) |
| Stall torque | 0.95 | Nm |
| Stall current | 7.3 | A (rms) |
| No load speed | 4180 | rpm |
| EMF constant ±10% | 7.8 | V AC (rms) / 1000rpm |
| Theoretical torque constant ±10% | 0.13 | Nm / A (rms) |
| Torque constant ±10% @ rated load | 0.12 | Nm / A (rms) |
| Number of poles | 6 | |
| Electrical time constant | 1.36 | ms |
| Winding terminal resistance | 0.87 | Ω |
| Rotary field terminal inductance | 1.18 | mH |

| Customs info | |
|---|---|
| HS Code | 85015100 |

| Mechanical data (setting 48) | | |
|---|---|---|
| Max mechanical speed | 12000 | rpm |
| Mech. time constant | 1.00 | ms |
| Thermal time constant | 18 | min |
| Rotor inertia | 0.11 | kgcm² |
| Protection | IP64 | |
| Color | RAL 9005 | |
| Cooling | Convection | |
| Motor-only mass | 1.75 | kg |
| Max. axial force 20kh | 50 | N |
| Max. radial force 20kh* | 264 | N |
| Max. axial force 100kh | 29 | N |
| Max. radial force 100kh* | 154 | N |

** Defined for point of action at ½ output shaft length*

| Sensors | |
|---|---|
| Temperature | PT1000 {PT1000} |
| Feedback | EEM37 (HDSL) multi-turn, 17+12 bits |

| Brake | | |
|---|---|---|
| Braking torque | 2.00 | Nm |
| Voltage | 24 | V DC |
| Power @20°C | 11.0 | W |
| Current @20°C | 0.46 | A |
| Inertia | 0.08 | kgcm² |
| Mass | 0.20 | kg |

Torque / speed curve

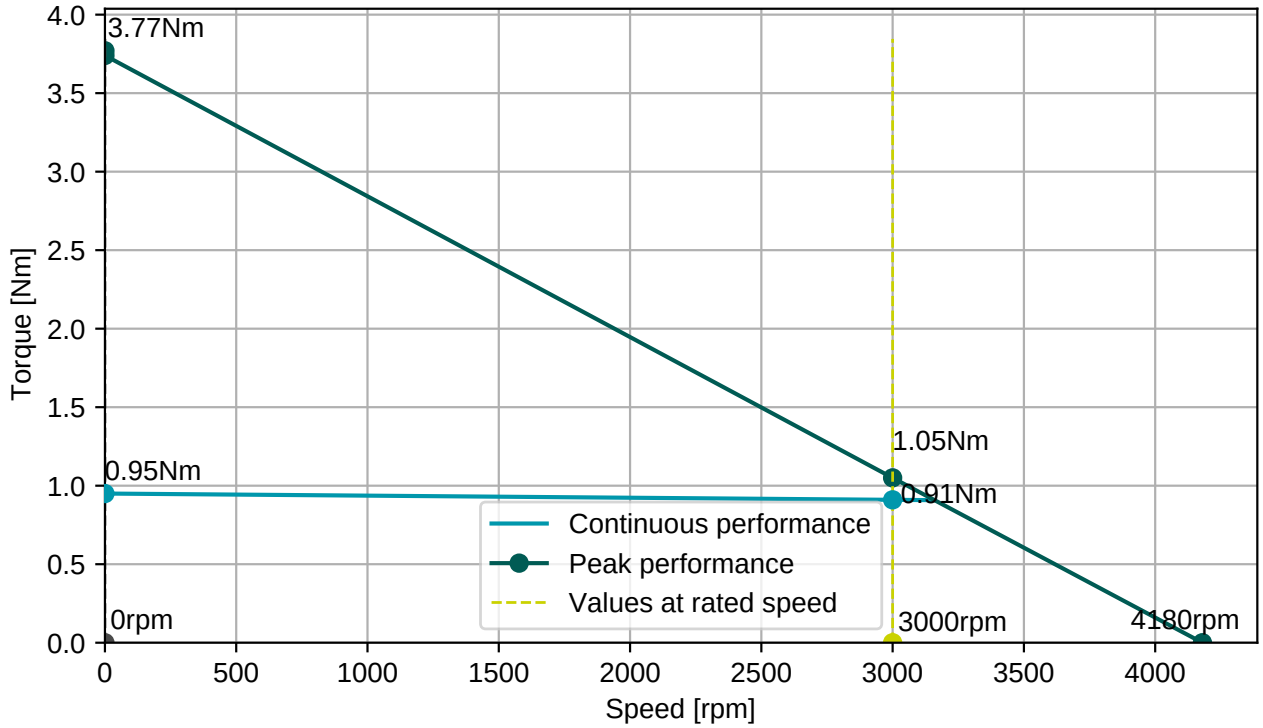


**BGC110N00001216000**

M23, 8 poles, rotary

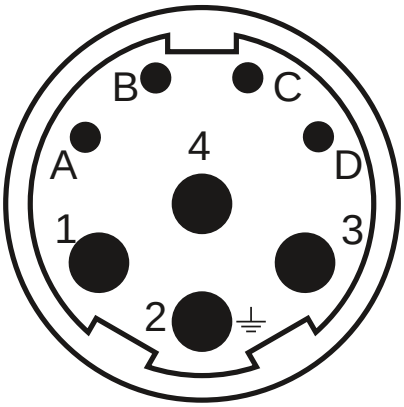


| Connector 1 (283) | |
|---|---|
| **1** | U |
| **4** | V |
| **3** | W |
| **2** | PE |
| **A** | Brake+ |
| **B** | Brake- |
| **C** | GND/DSL- |
| **D** | +Us/DSL+ |

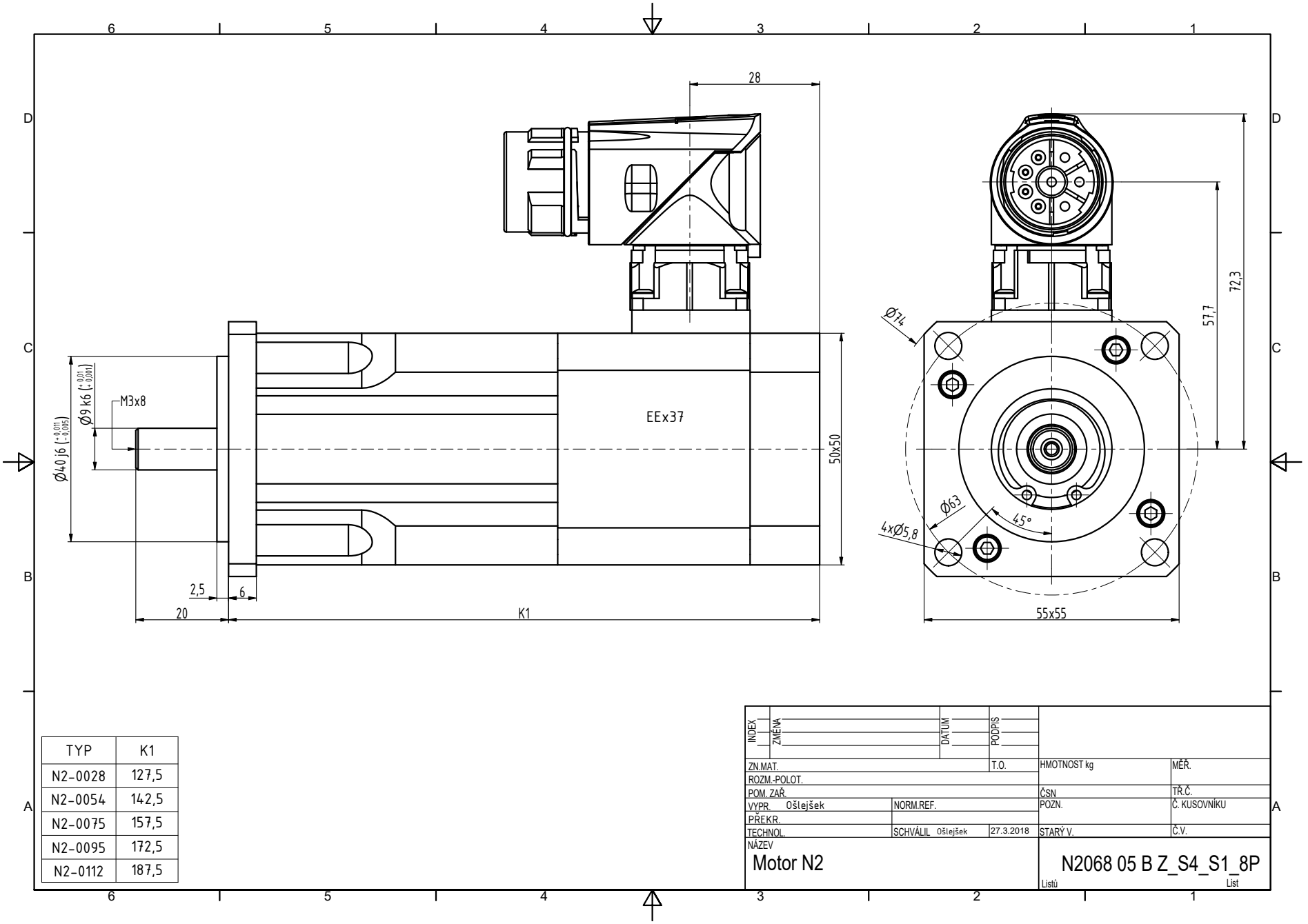


| TYP | K1 |
|---|---|
| N2-0028 | 127,5 |
| N2-0054 | 142,5 |
| N2-0075 | 157,5 |
| N2-0095 | 172,5 |
| N2-0112 | 187,5 |

| INDEX | ZMĚNA | DATUM | PODPIS |
|---|---|---|---|
| | | | |

| | | | | | |
|---|---|---|---|---|---|
| ZN.MAT. | | | T.O. | HMOTNOST kg | MĚŘ. |
| ROZM.-POLOT. | | | | | |
| POM. ZAŘ. | | | | ČSN | TŘ.Č. |
| VYPR. Ošlejšek | NORM.REF. | | | POZN. | Č. KUSOVNÍKU |
| PŘEKR. | | | | | |
| TECHNOL. | SCHVÁLIL Ošlejšek | 27.3.2018 | | STARÝ V. | Č.V. |

NÁZEV
Motor N2

N2068 05 B Z_S4_S1_8P

Listů List