Engineering data (WIN 926)		
DC bus voltage	320	V DC
Nominal AC voltage	220	V AC (rms)
Rated voltage	163	V AC (rms)
Rated power	293	W
Rated speed	8000	rpm
Rated torque	0.35	Nm
Rated current	1.38	A (rms)
Peak torque	2.16	Nm
Peak current	8.6	A (rms)
Stall torque	0.54	Nm
Stall current	1.87	A (rms)
No load speed	12410	rpm
EMF constant ±10%	17.5	V AC (rms) / 1000rpm
Theoretical torque constant ±10%	0.29	Nm / A (rms)
Torque constant ±10% @ rated load	0.25	Nm / A (rms)
Number of poles	6	
Electrical time constant	1.25	ms
Winding terminal resistance	10.2	Ω
Rotary field terminal inductance	12.8	mH

Customs info	
HS Code	85015100

Mechanical data (setting 48)		
Max mechanical speed	12000	rpm
Mech. time constant	1.48	ms
Thermal time constant	12	min
Rotor inertia	0.07	kgcm²
Protection	IP64	
Color	RAL 9005	
Cooling	Convection	
Motor-only mass	0.9	kg
Max. axial force 20kh	35	N
Max. radial force 20kh*	183	N
Max. axial force 100kh	20	N
Max. radial force 100kh*	107	N

** Defined for point of action at ½ output shaft length*

Sensors	
Temperature	PT1000 {PT1000}
Feedback	EEM37 (HDSL) multi-turn, 17+12 bits

Brake		
Braking torque	2.00	Nm
Voltage	24	V DC
Power @20°C	11.0	W
Current @20°C	0.46	A
Inertia	0.08	kgcm²
Mass	0.20	kg

Torque / speed curve

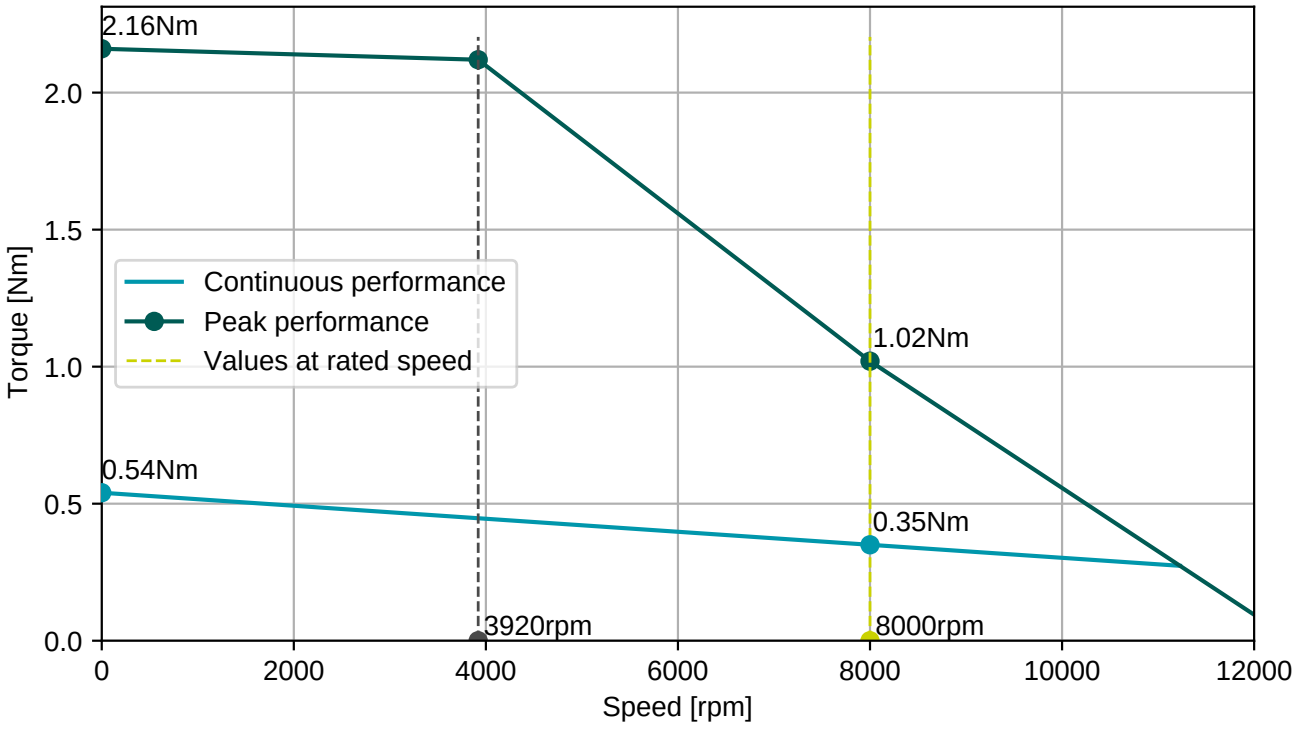

BGC110N00001216000

M23, 8 poles, rotary

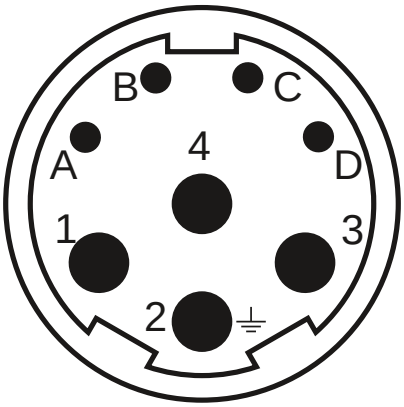

Connector 1 (283)	
1	U
4	V
3	W
2	PE
A	Brake+
B	Brake-
C	GND/DSL-
D	+Us/DSL+

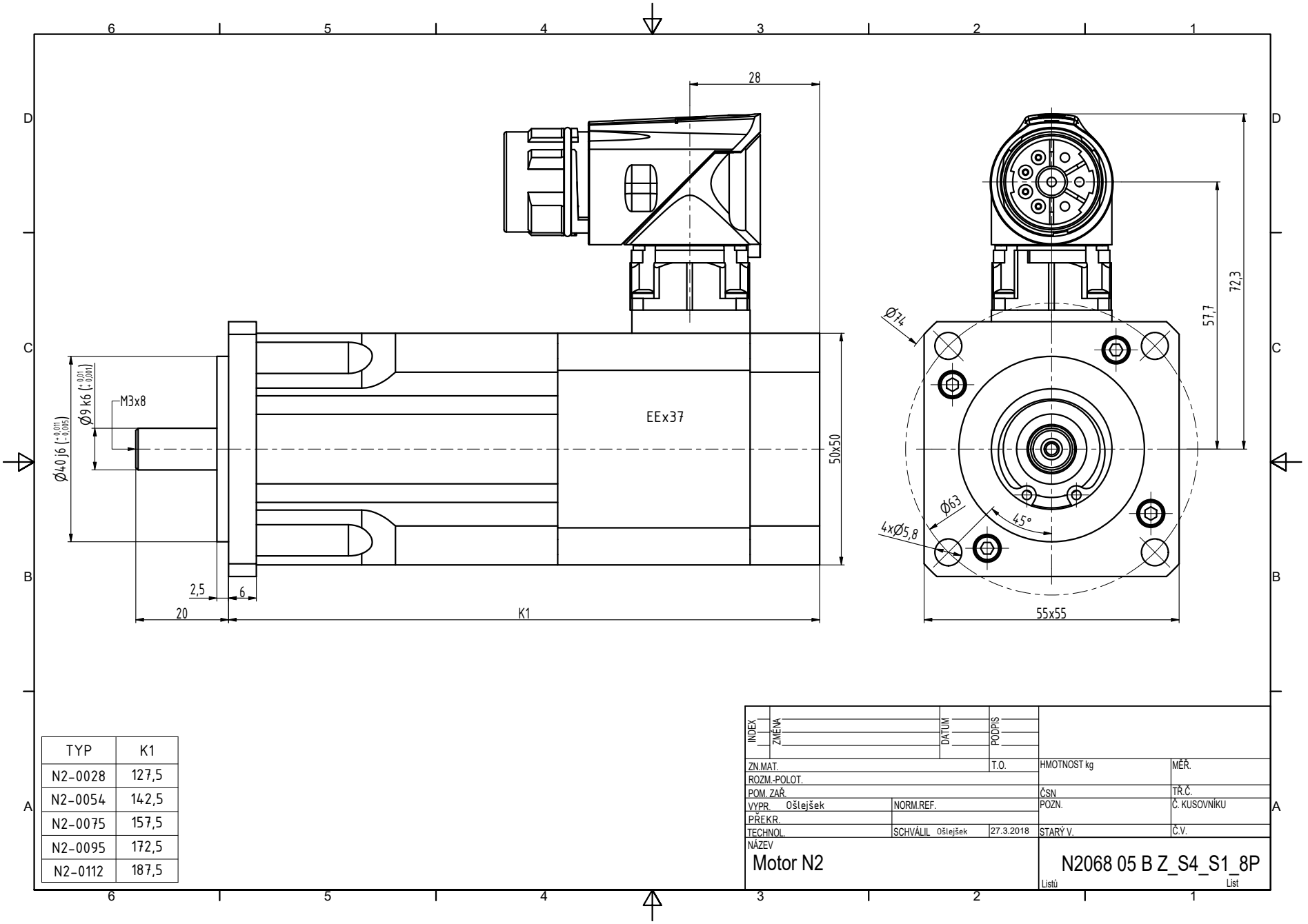

TYP	K1
N2-0028	127,5
N2-0054	142,5
N2-0075	157,5
N2-0095	172,5
N2-0112	187,5

INDEX	ZMĚNA	DATUM	PODPIS		
ZN.MAT.			T.O.	HMOTNOST kg	MĚŘ.
ROZM.-POLOT.					
POM. ZAŘ.				ČSN	TŘ.Č.
VYPR. Ošlejšek		NORM.REF.		POZN.	Č. KUSOVNÍKU
PŘEKR.					
TECHNOL.		SCHVÁLIL Ošlejšek	27.3.2018	STARÝ V.	Č.V.

NÁZEV
Motor N2

N2068 05 B Z_S4_S1_8P

Listů List