Engineering data (WIN 750)		
DC bus voltage	320	V DC
Nominal AC voltage	220	V AC (rms)
Rated voltage	161	V AC (rms)
Rated power	270	W
Rated speed	6000	rpm
Rated torque	0.43	Nm
Rated current	1.3	A (rms)
Peak torque	2.16	Nm
Peak current	6.8	A (rms)
Stall torque	0.54	Nm
Stall current	1.48	A (rms)
No load speed	9870	rpm
EMF constant ±10%	22	V AC (rms) / 1000rpm
Theoretical torque constant ±10%	0.36	Nm / A (rms)
Torque constant ±10% @ rated load	0.33	Nm / A (rms)
Number of poles	6	
Electrical time constant	1.25	ms
Winding terminal resistance	15.82	Ω
Rotary field terminal inductance	19.8	mH

Customs info	
HS Code	85015100

Mechanical data (setting 48)		
Max mechanical speed	12000	rpm
Mech. time constant	1.45	ms
Thermal time constant	12	min
Rotor inertia	0.07	kgcm²
Protection	IP64	
Color	RAL 9005	
Cooling	Convection	
Motor-only mass	0.9	kg
Max. axial force 20kh	35	N
Max. radial force 20kh*	186	N
Max. axial force 100kh	21	N
Max. radial force 100kh*	109	N

** Defined for point of action at ½ output shaft length*

Sensors	
Temperature	PT1000 {PT1000}
Feedback	EEM37 (HDSL) multi-turn, 17+12 bits

Torque / speed curve

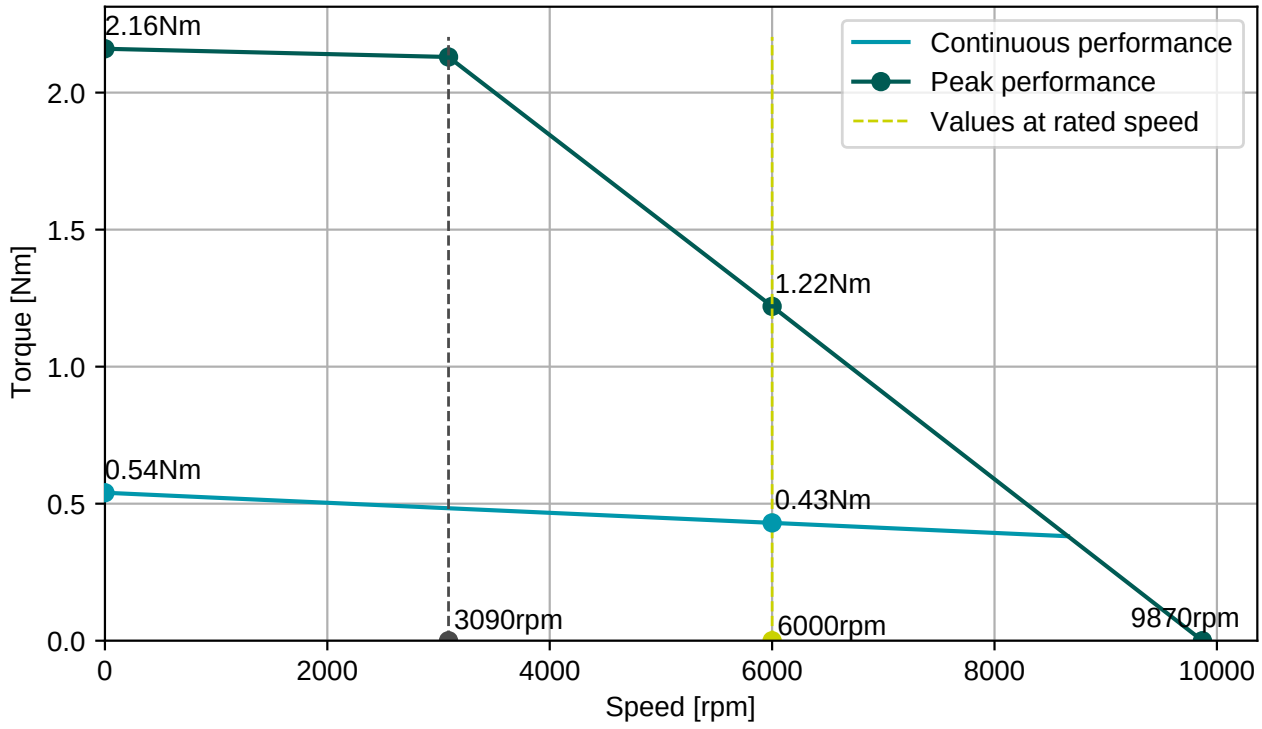

BGC110N00001216000

M23, 8 poles, rotary

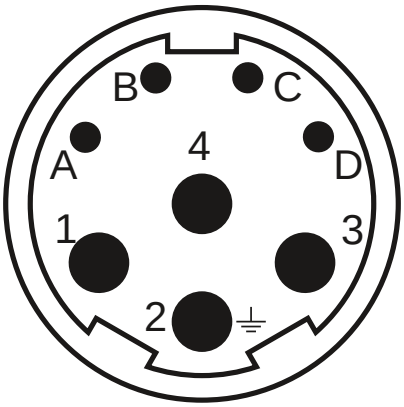

Connector 1 (283)	
1	U
4	V
3	W
2	PE
A	Brake+
B	Brake-
C	GND/DSL-
D	+Us/DSL+

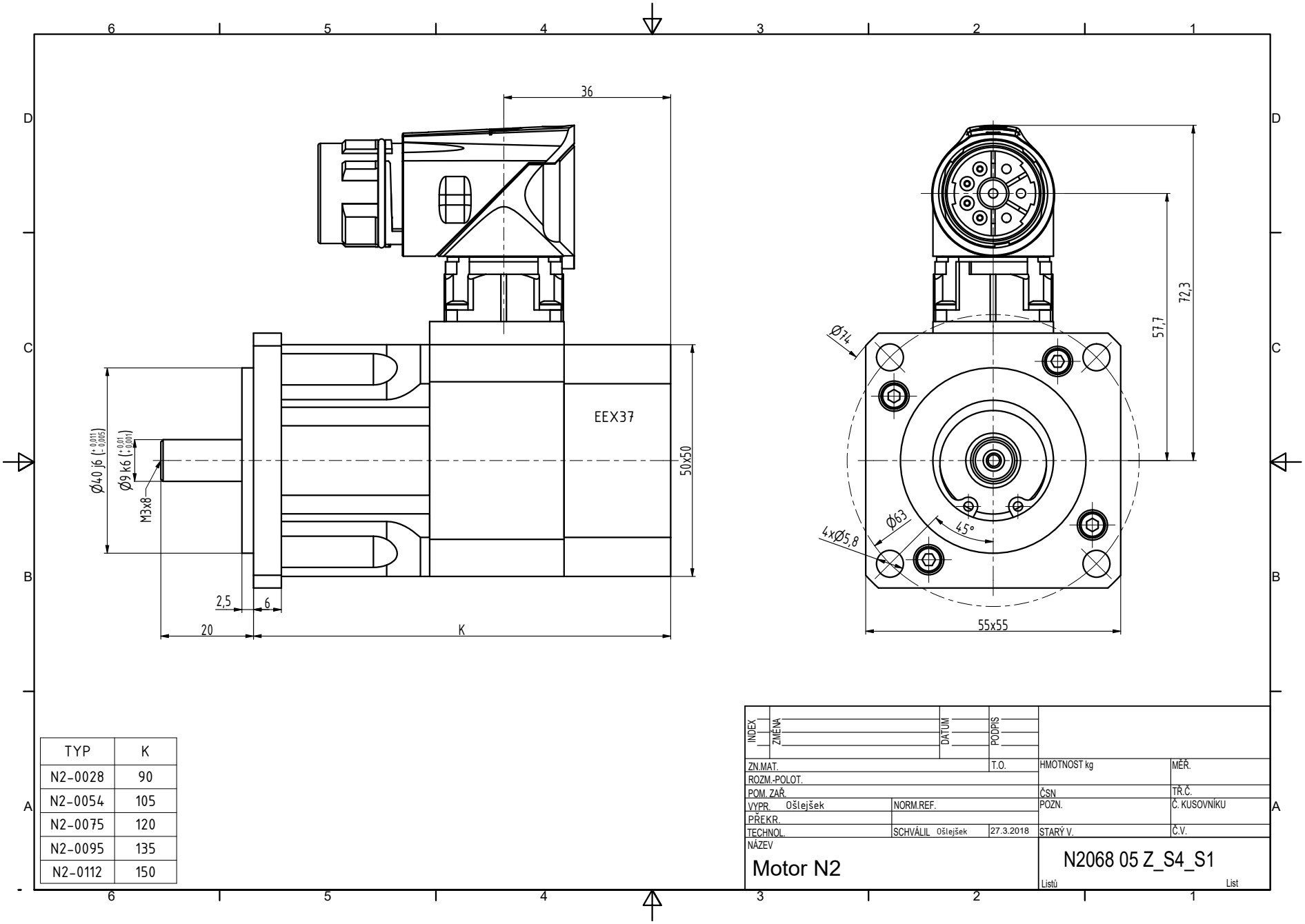

TYP	K
N2-0028	90
N2-0054	105
N2-0075	120
N2-0095	135
N2-0112	150

INDEX	ZMĚNA	DATUM	PODPIS

ZN.MAT.			T.O.	HMOTNOST kg	MĚŘ.
ROZM.-POLOT.					
POM. ZAŘ.				ČSN	TŘ.Č.
VYPR. Ošlejšek	NORM.REF.			POZN.	Č. KUSOVNÍKU
PŘEKR.					
TECHNOL.	SCHVÁLIL Ošlejšek	27.3.2018		STARÝ V.	Č.V.

NÁZEV

Motor N2

N2068 05 Z_S4_S1

Listů List