| Engineering data (WIN 1486) | | |
|---|---|---|
| DC bus voltage | 24 | V DC |
| Nominal AC voltage | 17 | V AC (rms) |
| Rated voltage | 16 | V AC (rms) |
| Rated power | 160 | W |
| Rated speed | 3000 | rpm |
| Rated torque | 0.51 | Nm |
| Rated current | 9.01 | A (rms) |
| Peak torque | 1.79 | Nm |
| Peak current | 32.1 | A (rms) |
| Stall torque | 0.54 | Nm |
| Stall current | 8.9 | A (rms) |
| No load speed | 4560 | rpm |
| EMF constant ±10% | 3.65 | V AC (rms) / 1000rpm |
| Theoretical torque constant ±10% | 0.06 | Nm / A (rms) |
| Torque constant ±10% @ rated load | 0.06 | Nm / A (rms) |
| Number of poles | 6 | |
| Electrical time constant | 1.26 | ms |
| Winding terminal resistance | 0.438 | Ω |
| Rotary field terminal inductance | 0.55 | mH |

| Customs info | |
|---|---|
| HS Code | 85015100 |

| Mechanical data (setting 48) | | |
|---|---|---|
| Max mechanical speed | 12000 | rpm |
| Mech. time constant | 1.46 | ms |
| Thermal time constant | 12 | min |
| Rotor inertia | 0.07 | kgcm² |
| Protection | IP64 | |
| Color | RAL 9005 | |
| Cooling | Convection | |
| Motor-only mass | 0.9 | kg |
| Max. axial force 20kh | 45 | N |
| Max. radial force 20kh* | 234 | N |
| Max. axial force 100kh | 26 | N |
| Max. radial force 100kh* | 137 | N |

** Defined for point of action at ½ output shaft length*

| Sensors | |
|---|---|
| Temperature | PT1000 {PT1000} |
| Feedback | EES37 (HDSL) single-turn, 17 bits |

Torque / speed curve

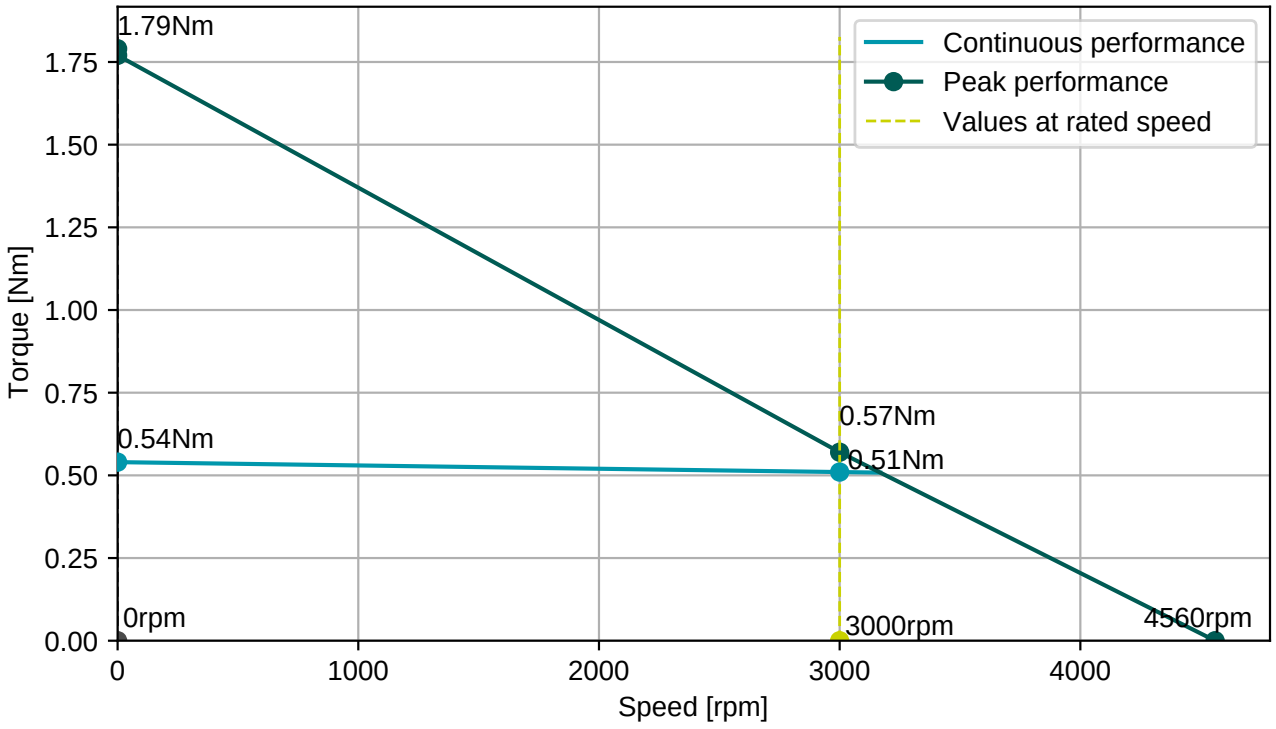


**BGC110N00001216000**

M23, 8 poles, rotary

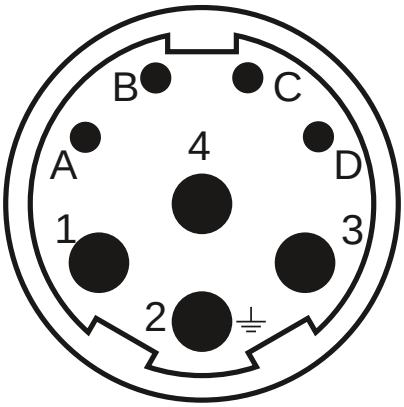


| Connector 1 (283) | |
|---|---|
| **1** | U |
| **4** | V |
| **3** | W |
| **2** | PE |
| **A** | Brake+ |
| **B** | Brake- |
| **C** | GND/DSL- |
| **D** | +Us/DSL+ |

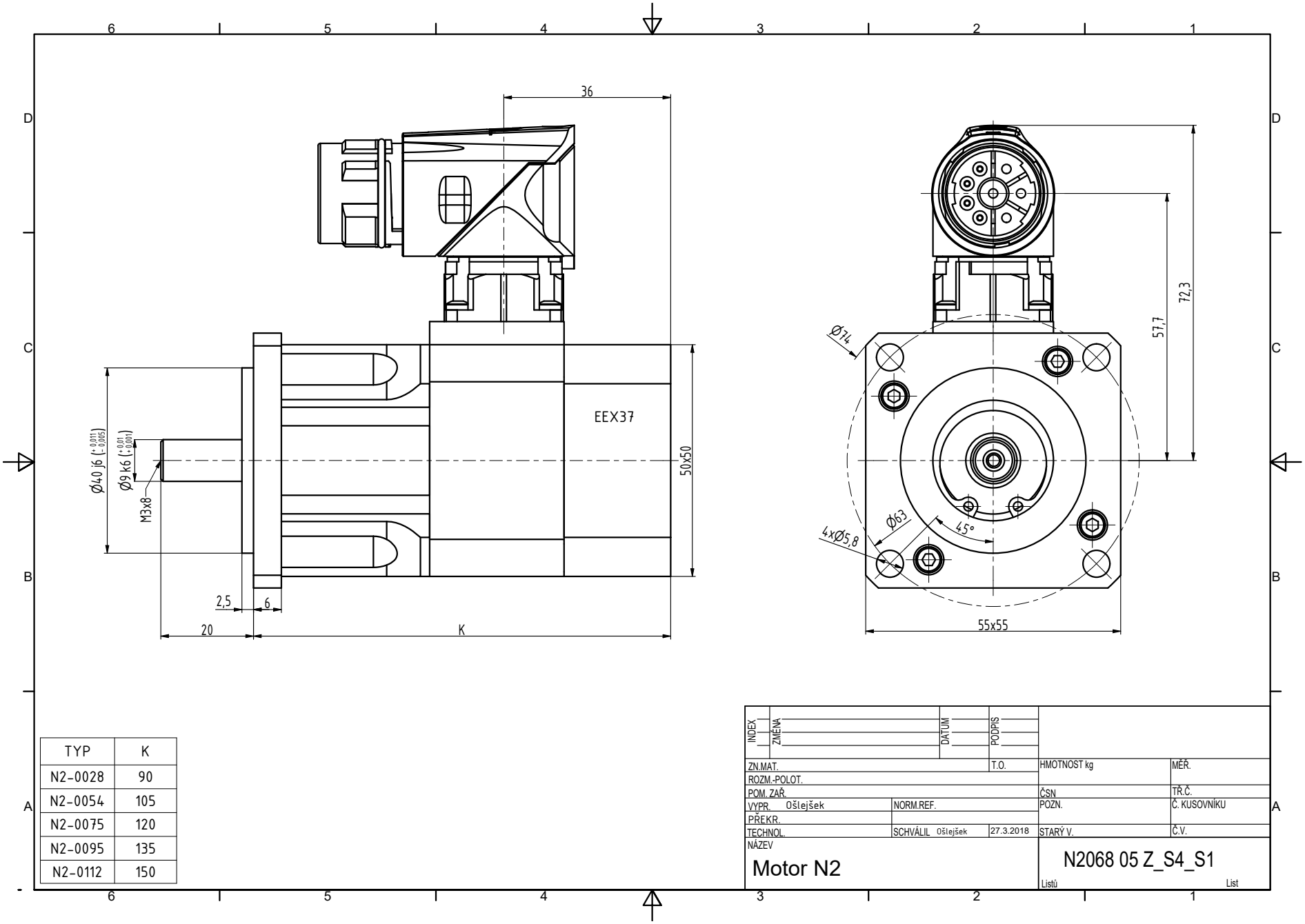


| TYP | K |
|---|---|
| N2-0028 | 90 |
| N2-0054 | 105 |
| N2-0075 | 120 |
| N2-0095 | 135 |
| N2-0112 | 150 |

| INDEX | ZMĚNA | DATUM | PODPIS |
|---|---|---|---|
| | | | |

| | | | | |
|---|---|---|---|---|
| ZN.MAT. | | T.O. | HMOTNOST kg | MĚŘ. |
| ROZM.-POLOT. | | | | |
| POM. ZAŘ. | | | ČSN | TŘ.Č. |
| VYPR. Ošlejšek | NORM.REF. | | POZN. | Č. KUSOVNÍKU |
| PŘEKR. | | | | |
| TECHNOL. | SCHVÁLIL Ošlejšek | 27.3.2018 | STARÝ V. | Č.V. |

NÁZEV

Motor N2

N2068 05 Z_S4_S1

Listů List