Engineering data (WIN 978)		
DC bus voltage	48	V DC
Nominal AC voltage	33	V AC (rms)
Rated voltage	25	V AC (rms)
Rated power	160	W
Rated speed	3000	rpm
Rated torque	0.51	Nm
Rated current	6.01	A (rms)
Peak torque	2.16	Nm
Peak current	27.5	A (rms)
Stall torque	0.54	Nm
Stall current	6	A (rms)
No load speed	5930	rpm
EMF constant ±10%	5.5	V AC (rms) / 1000rpm
Theoretical torque constant ±10%	0.09	Nm / A (rms)
Torque constant ±10% @ rated load	0.08	Nm / A (rms)
Number of poles	6	
Electrical time constant	1.21	ms
Winding terminal resistance	0.99	Ω
Rotary field terminal inductance	1.2	mH

Customs info	
HS Code	85015100

Mechanical data (setting 48)		
Max mechanical speed	12000	rpm
Mech. time constant	1.45	ms
Thermal time constant	12	min
Rotor inertia	0.07	kgcm²
Protection	IP64	
Color	RAL 9005	
Cooling	Convection	
Motor-only mass	0.9	kg
Max. axial force 20kh	45	N
Max. radial force 20kh*	234	N
Max. axial force 100kh	26	N
Max. radial force 100kh*	137	N

** Defined for point of action at ½ output shaft length*

Sensors	
Temperature	PT1000 {PT1000}
Feedback	EKS36 (HDSL) single-turn, 18 bits, SIL2

Torque / speed curve

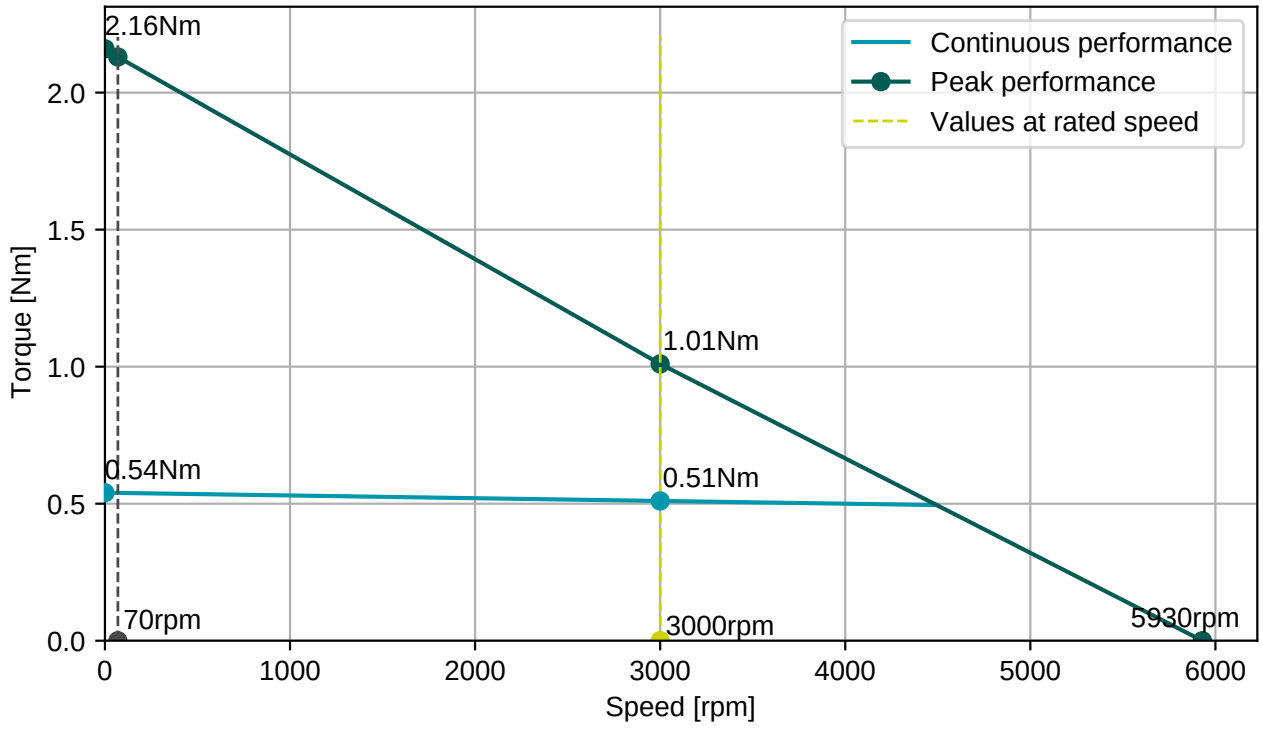

EGA201N00000800000

M15, 9 poles, rotary

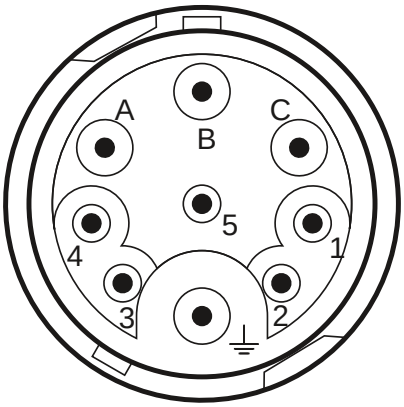

Connector 1 (304)	
A	U
B	V
C	W
PE	PE
1	Brake+
2	Brake-
3	+Us/DSL+
4	GND/DSL-

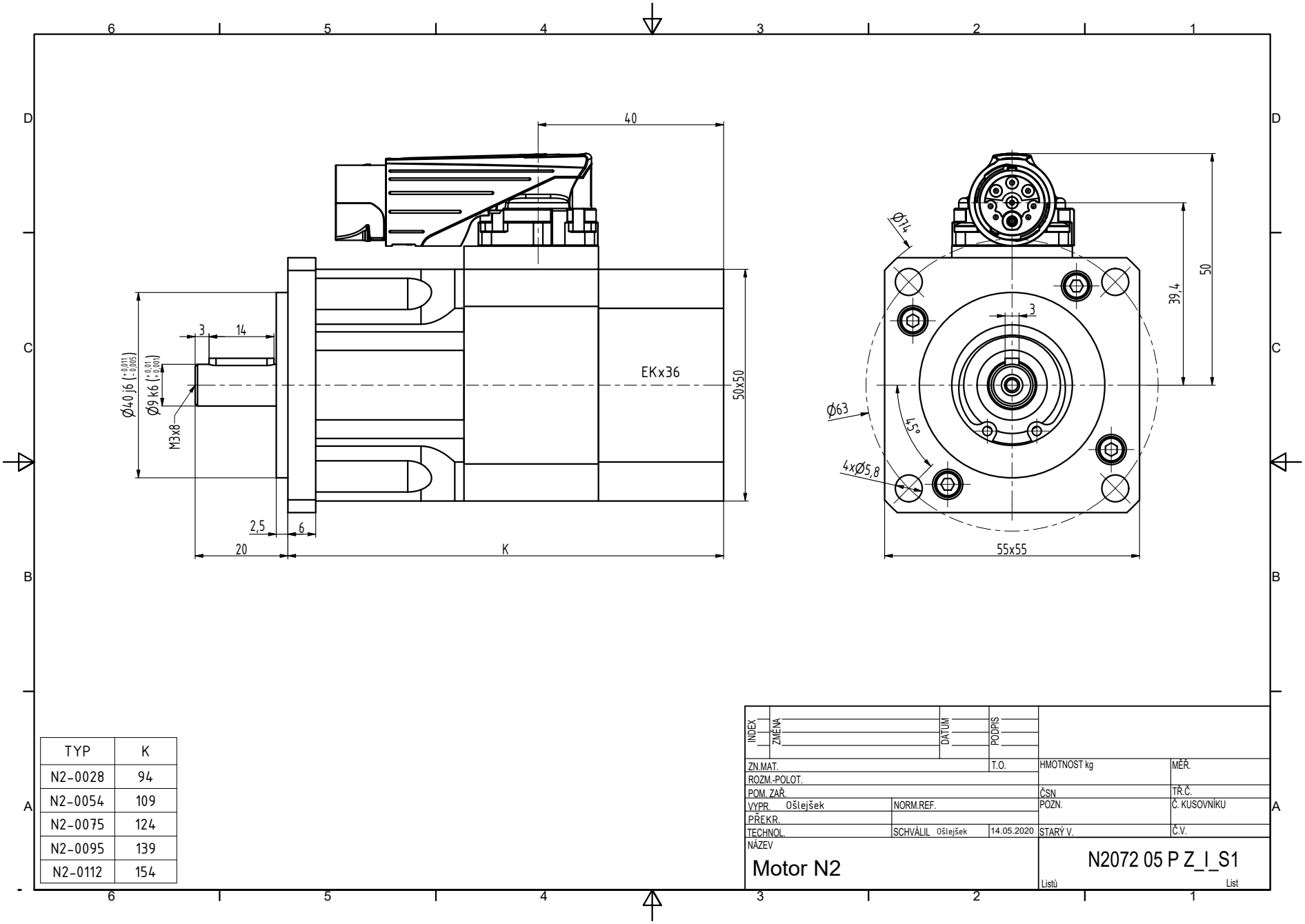

TYP	K
N2-0028	94
N2-0054	109
N2-0075	124
N2-0095	139
N2-0112	154

INDEX	ZMĚNA	DATUM	PODPIS

ZN.MAT.		T.O.	HMOTNOST kg	MĚŘ.	
ROZM.-POLOT.					
POM. ZAŘ.			ČSN	TŘ.Č.	
VYPR. Ošlejšek	NORM.REF.		POZN.	Č. KUSOVNÍKU	
PŘEKR.					
TECHNOL.	SCHVÁLIL Ošlejšek	14.05.2020	STARÝ V.	Č.V.	

NÁZEV

Motor N2

N2072 05 P Z_I_S1

Listů List