Engineering data (WIN 776)		
DC bus voltage	560	V DC
Nominal AC voltage	380	V AC (rms)
Rated voltage	207	V AC (rms)
Rated power	226	W
Rated speed	4500	rpm
Rated torque	0.48	Nm
Rated current	0.9	A (rms)
Peak torque	2.16	Nm
Peak current	4.3	A (rms)
Stall torque	0.54	Nm
Stall current	0.93	A (rms)
No load speed	10710	rpm
EMF constant ±10%	35	V AC (rms) / 1000rpm
Theoretical torque constant ±10%	0.58	Nm / A (rms)
Torque constant ±10% @ rated load	0.53	Nm / A (rms)
Number of poles	6	
Electrical time constant	1.25	ms
Winding terminal resistance	41.1	Ω
Rotary field terminal inductance	51.2	mH

Customs info	
HS Code	85015100

Mechanical data (setting 48)		
Max mechanical speed	12000	rpm
Mech. time constant	1.49	ms
Thermal time constant	12	min
Rotor inertia	0.07	kgcm²
Protection	IP64	
Color	RAL 9005	
Cooling	Convection	
Motor-only mass	0.9	kg
Max. axial force 20kh	42	N
Max. radial force 20kh*	222	N
Max. axial force 100kh	25	N
Max. radial force 100kh*	130	N

** Defined for point of action at ½ output shaft length*

Sensors	
Temperature	PT1000 {PT1000}
Feedback	EEM37 (HDSL) multi-turn, 17+12 bits

Brake		
Braking torque	2.00	Nm
Voltage	24	V DC
Power @20°C	11.0	W
Current @20°C	0.46	A
Inertia	0.08	kgcm²
Mass	0.20	kg

Torque / speed curve

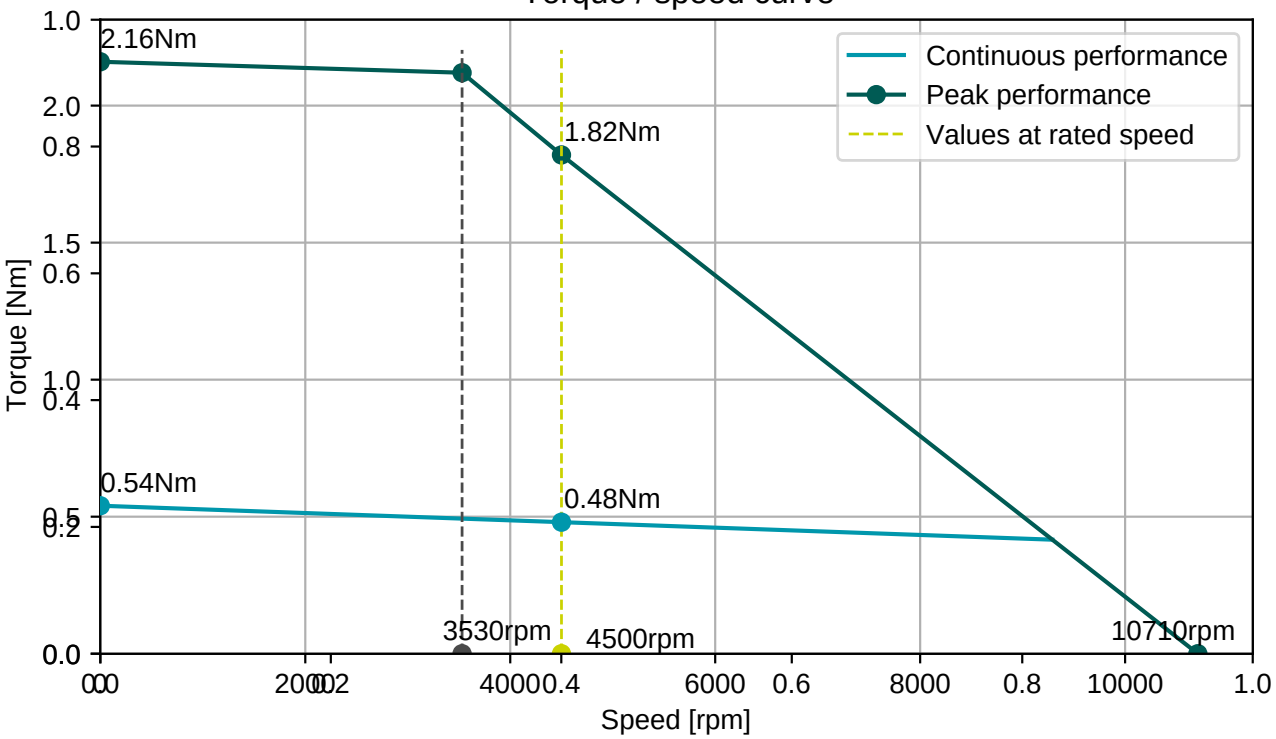

EGA201N00000800000

M15, 9 poles, rotary

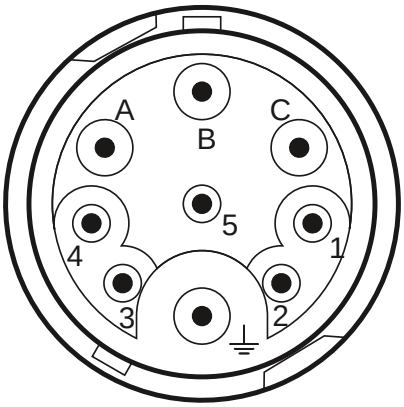

Connector 1 (304)	
A	U
B	V
C	W
PE	PE
1	Brake+
2	Brake-
3	+Us/DSL+
4	GND/DSL-

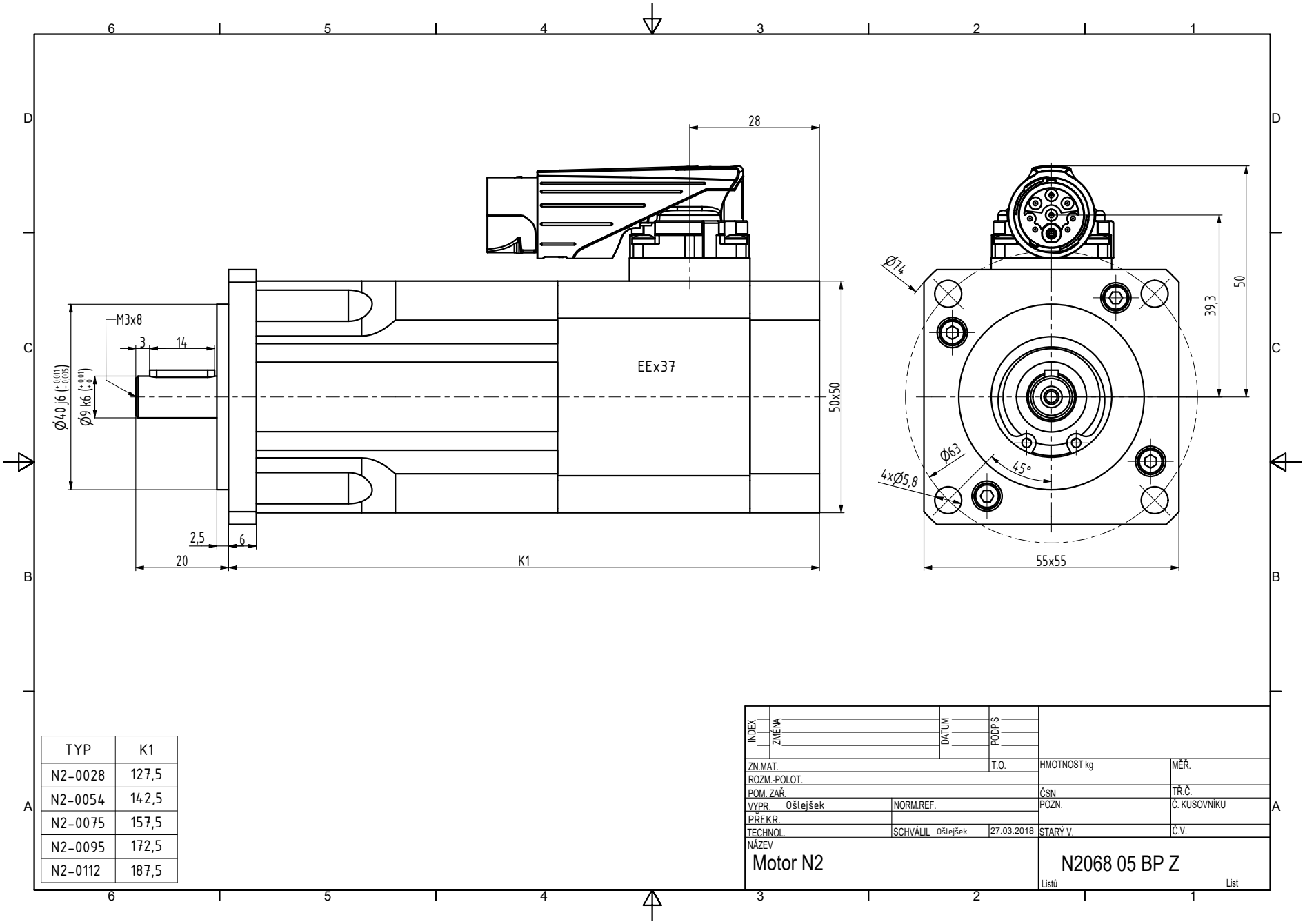

TYP	K1
N2-0028	127,5
N2-0054	142,5
N2-0075	157,5
N2-0095	172,5
N2-0112	187,5

INDEX	ZMĚNA	DATUM	PODPIS

ZN.MAT.		T.O.	HMOTNOST kg	MĚŘ.
ROZM.-POLOT.				
POM. ZAŘ.			ČSN	TŘ.Č.
VYPR. Ošlejšek	NORM.REF.		POZN.	Č. KUSOVNÍKU
PŘEKR.				
TECHNOL.	SCHVÁLIL Ošlejšek	27.03.2018	STARÝ V.	Č.V.

NÁZEV
Motor N2

N2068 05 BP Z

Listů List