Engineering data (WIN 777)		
DC bus voltage	36	V DC
Nominal AC voltage	25	V AC (rms)
Rated voltage	19	V AC (rms)
Rated power	160	W
Rated speed	3000	rpm
Rated torque	0.51	Nm
Rated current	7.65	A (rms)
Peak torque	2.08	Nm
Peak current	33.2	A (rms)
Stall torque	0.54	Nm
Stall current	7.6	A (rms)
No load speed	5710	rpm
EMF constant ±10%	4.3	V AC (rms) / 1000rpm
Theoretical torque constant ±10%	0.07	Nm / A (rms)
Torque constant ±10% @ rated load	0.07	Nm / A (rms)
Number of poles	6	
Electrical time constant	1.23	ms
Winding terminal resistance	0.62	Ω
Rotary field terminal inductance	0.76	mH

Customs info	
HS Code	85015100

Mechanical data (setting 48)		
Max mechanical speed	12000	rpm
Mech. time constant	1.49	ms
Thermal time constant	12	min
Rotor inertia	0.07	kgcm²
Protection	IP64	
Color	RAL 9005	
Cooling	Convection	
Motor-only mass	0.9	kg
Max. axial force 20kh	48	N
Max. radial force 20kh*	254	N
Max. axial force 100kh	28	N
Max. radial force 100kh*	149	N

** Defined for point of action at ½ output shaft length*

Sensors	
Temperature	PT1000 {PT1000}
Feedback	EES37 (HDSL) single-turn, 17 bits

Brake		
Braking torque	2.00	Nm
Voltage	24	V DC
Power @20°C	11.0	W
Current @20°C	0.46	A
Inertia	0.08	kgcm²
Mass	0.20	kg

Torque / speed curve

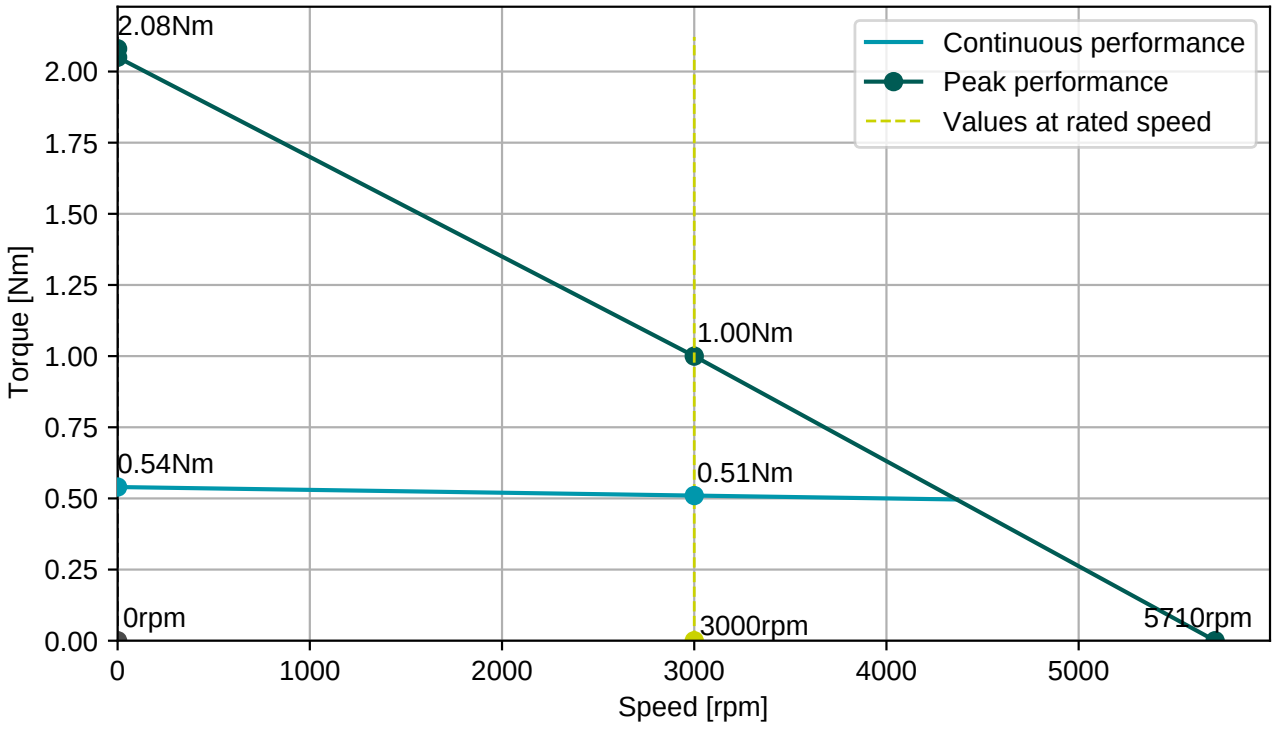

EGA201N00000800000

M15, 9 poles, rotary

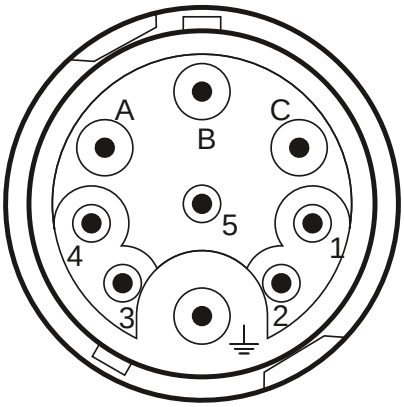

Connector 1 (304)	
A	U
B	V
C	W
PE	PE
1	Brake+
2	Brake-
3	+Us/DSL+
4	GND/DSL-

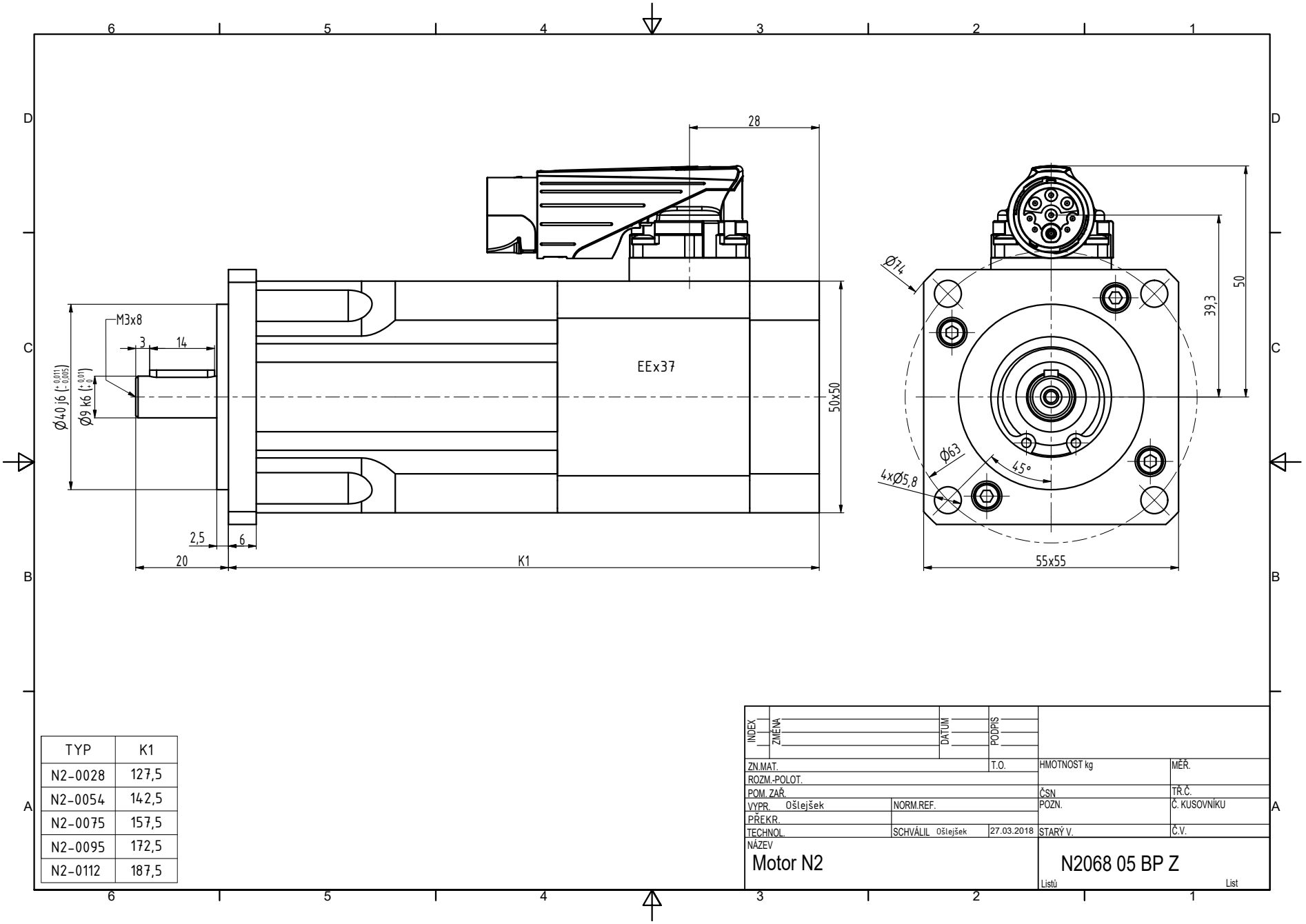

TYP	K1
N2-0028	127,5
N2-0054	142,5
N2-0075	157,5
N2-0095	172,5
N2-0112	187,5

INDEX	ZMĚNA	DATUM	PODPIS

ZN.MAT.		T.O.	HMOTNOST kg	MĚŘ.
ROZM.-POLOT.				
POM. ZAŘ.			ČSN	TŘ.Č.
VYPR. Ošlejšek	NORM.REF.		POZN.	Č. KUSOVNÍKU
PŘEKR.				
TECHNOL.	SCHVÁLIL Ošlejšek	27.03.2018	STARÝ V.	Č.V.

NÁZEV
Motor N2

N2068 05 BP Z

Listů List