Engineering data (WIN 1034)		
DC bus voltage	48	V DC
Nominal AC voltage	32	V AC (rms)
Rated voltage	25	V AC (rms)
Rated power	223	W
Rated speed	3000	rpm
Rated torque	0.71	Nm
Rated current	7.71	A (rms)
Peak torque	3	Nm
Peak current	35.5	A (rms)
Stall torque	0.75	Nm
Stall current	7.7	A (rms)
No load speed	5390	rpm
EMF constant ±10%	5.9	V AC (rms) / 1000rpm
Theoretical torque constant ±10%	0.1	Nm / A (rms)
Torque constant ±10% @ rated load	0.1	Nm / A (rms)
Number of poles	6	
Electrical time constant	1.29	ms
Winding terminal resistance	0.7	Ω
Rotary field terminal inductance	0.9	mH

Customs info	
HS Code	85015100

Mechanical data (setting 48)		
Max mechanical speed	12000	rpm
Mech. time constant	1.15	ms
Thermal time constant	12	min
Rotor inertia	0.09	kgcm²
Protection	IP64	
Color	RAL 9005	
Cooling	Convection	
Motor-only mass	1.35	kg
Max. axial force 20kh	47	N
Max. radial force 20kh*	246	N
Max. axial force 100kh	27	N
Max. radial force 100kh*	144	N

** Defined for point of action at ½ output shaft length*

Sensors	
Temperature	PT1000 {PT1000}
Feedback	EES37 (HDSL) single-turn, 17 bits

Torque / speed curve

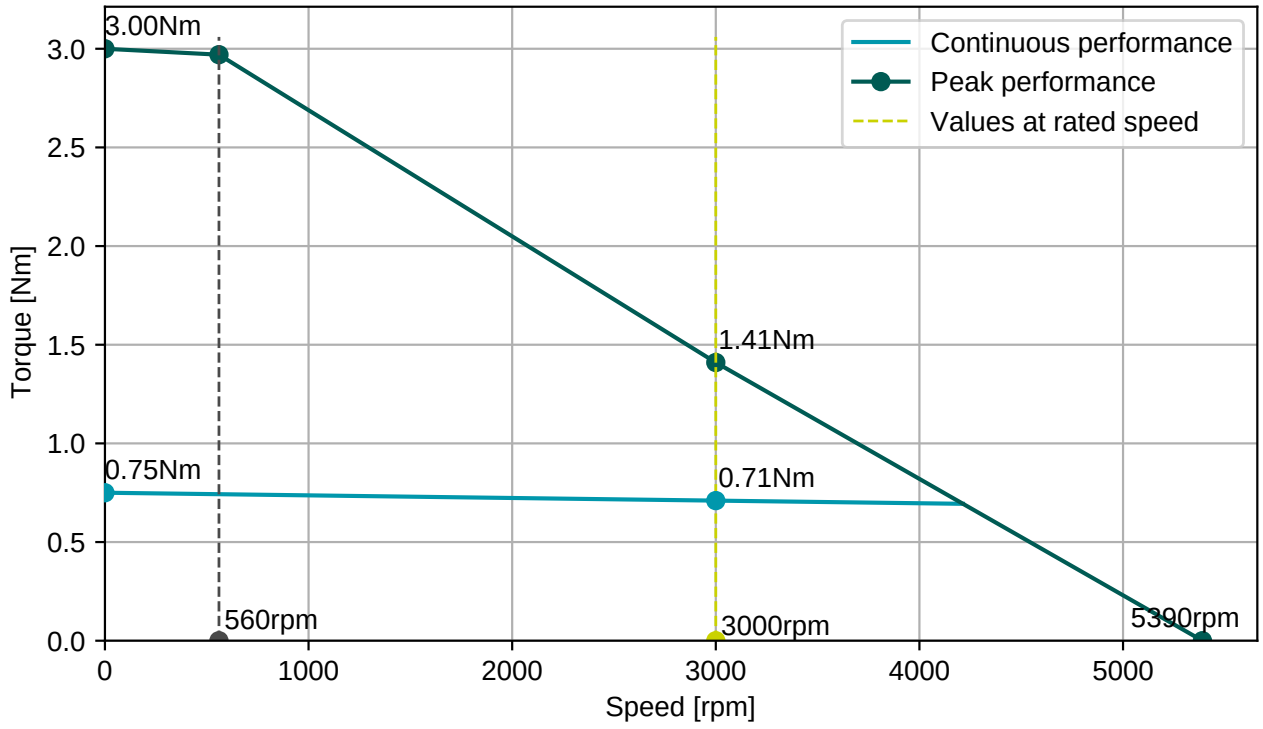

EGA201N00000800000

M15, 9 poles, rotary

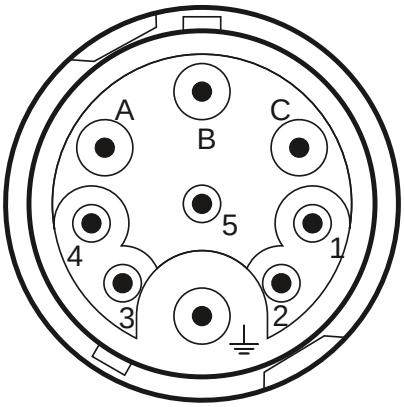

Connector 1 (304)	
A	U
B	V
C	W
PE	PE
1	Brake+
2	Brake-
3	+Us/DSL+
4	GND/DSL-

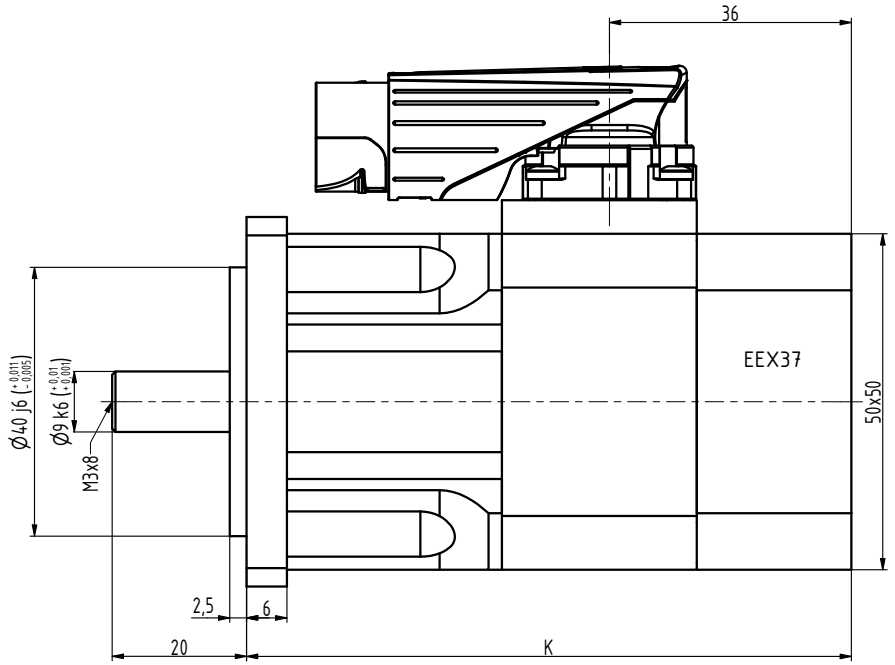

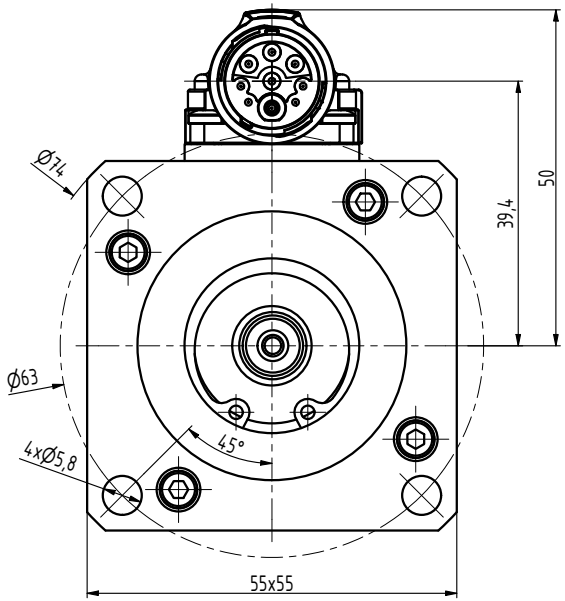

TYP	K
N2-0028	90
N2-0054	105
N2-0075	120
N2-0095	135
N2-0112	150

INDEX	ZMĚNA	DATUM	PODPIS		
ZN.MAT.			T.O.	HMOTNOST kg	MĚŘ.
ROZM.-POLOT.					
POM. ZAŘ.				ČSN	TŘ.Č.
VYPR. Ošlejšek		NORM.REF.		POZN.	Č. KUSOVNÍKU
PŘEKR.					
TECHNOL.		SCHVÁLIL Ošlejšek	01.07.2021	STARÝ V.	Č.V.

NÁZEV

Motor N2

N2068 05 Z_I_S1

Listů List