Engineering data (WIN 1615)		
DC bus voltage	18	V DC
Nominal AC voltage	12	V AC (rms)
Rated voltage	10	V AC (rms)
Rated power	205	W
Rated speed	4000	rpm
Rated torque	0.49	Nm
Rated current	17.51	A (rms)
Peak torque	2.16	Nm
Peak current	82.5	A (rms)
Stall torque	0.54	Nm
Stall current	17.9	A (rms)
No load speed	6480	rpm
EMF constant ±10%	1.82	V AC (rms) / 1000rpm
Theoretical torque constant ±10%	0.03	Nm / A (rms)
Torque constant ±10% @ rated load	0.03	Nm / A (rms)
Number of poles	6	
Electrical time constant	1.27	ms
Winding terminal resistance	0.11	Ω
Rotary field terminal inductance	0.14	mH

Customs info	
HS Code	85015100

Mechanical data (setting 48)		
Max mechanical speed	12000	rpm
Mech. time constant	1.47	ms
Thermal time constant	12	min
Rotor inertia	0.07	kgcm²
Protection	IP64	
Color	RAL 9005	
Cooling	Convection	
Motor-only mass	0.9	kg
Max. axial force 20kh	40	N
Max. radial force 20kh*	213	N
Max. axial force 100kh	24	N
Max. radial force 100kh*	125	N

** Defined for point of action at ½ output shaft length*

Sensors	
Temperature	PT1000 {PT1000}
Feedback	EES37 (HDSL) single-turn, 17 bits

Note

The winding of the motor has rated current 17.51 A. Power connector is rated only for 14 A. The motor can be operated only with continuous current limited to 14 A in servoamplifier. Otherwise the power connector could be burned.

Torque / speed curve

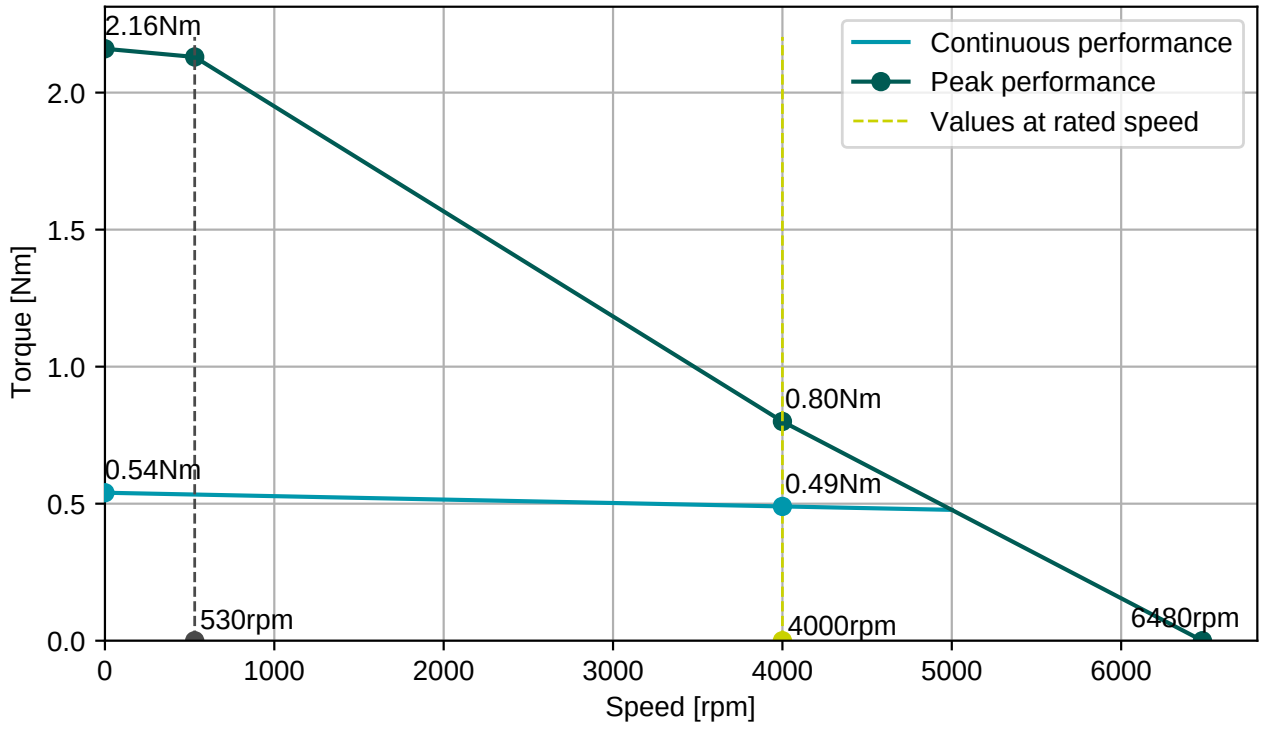

EGA201N00000800000

M15, 9 poles, rotary

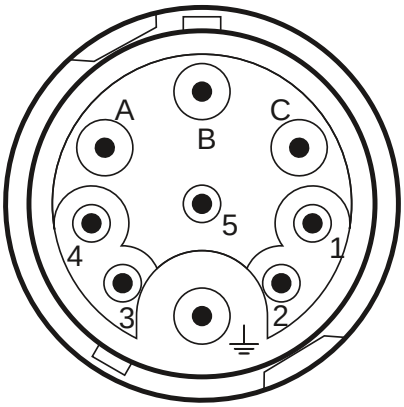

Connector 1 (304)	
A	U
B	V
C	W
PE	PE
1	Brake+
2	Brake-
3	+Us/DSL+
4	GND/DSL-

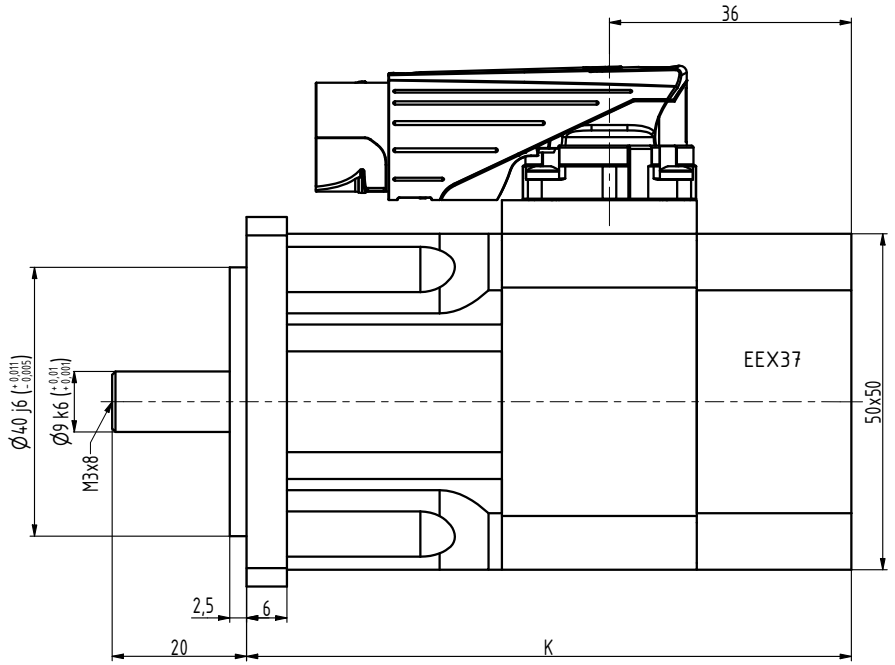

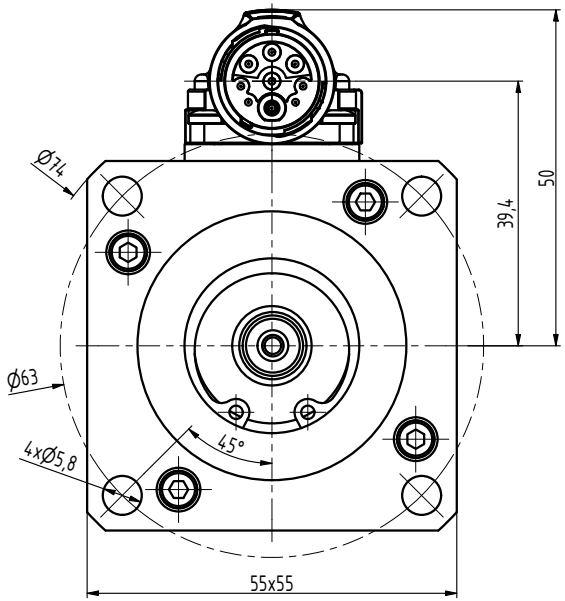

TYP	K
N2-0028	90
N2-0054	105
N2-0075	120
N2-0095	135
N2-0112	150

INDEX	ZMĚNA	DATUM	PODPIS		
ZN.MAT.			T.O.	HMOTNOST kg	MĚŘ.
ROZM.-POLOT.					
POM. ZAŘ.				ČSN	TŘ.Č.
VYPR. Ošlejšek		NORM.REF.		POZN.	Č. KUSOVNÍKU
PŘEKR.					
TECHNOL.		SCHVÁLIL Ošlejšek	01.07.2021	STARÝ V.	Č.V.

NÁZEV

Motor N2

N2068 05 Z_I_S1

Listů List