Engineering data (WIN 1486)		
DC bus voltage	24	V DC
Nominal AC voltage	17	V AC (rms)
Rated voltage	16	V AC (rms)
Rated power	160	W
Rated speed	3000	rpm
Rated torque	0.51	Nm
Rated current	9.01	A (rms)
Peak torque	1.79	Nm
Peak current	32.1	A (rms)
Stall torque	0.54	Nm
Stall current	8.9	A (rms)
No load speed	4560	rpm
EMF constant ±10%	3.65	V AC (rms) / 1000rpm
Theoretical torque constant ±10%	0.06	Nm / A (rms)
Torque constant ±10% @ rated load	0.06	Nm / A (rms)
Number of poles	6	
Electrical time constant	1.26	ms
Winding terminal resistance	0.438	Ω
Rotary field terminal inductance	0.55	mH

Customs info	
HS Code	85015100

Mechanical data (setting 48)		
Max mechanical speed	12000	rpm
Mech. time constant	1.46	ms
Thermal time constant	12	min
Rotor inertia	0.07	kgcm²
Protection	IP64	
Color	RAL 9005	
Cooling	Convection	
Motor-only mass	0.9	kg
Max. axial force 20kh	45	N
Max. radial force 20kh*	234	N
Max. axial force 100kh	26	N
Max. radial force 100kh*	137	N

** Defined for point of action at ½ output shaft length*

Sensors	
Temperature	PT1000 {PT1000}
Feedback	EEM37 (HDSL) multi-turn, 17+12 bits

Torque / speed curve

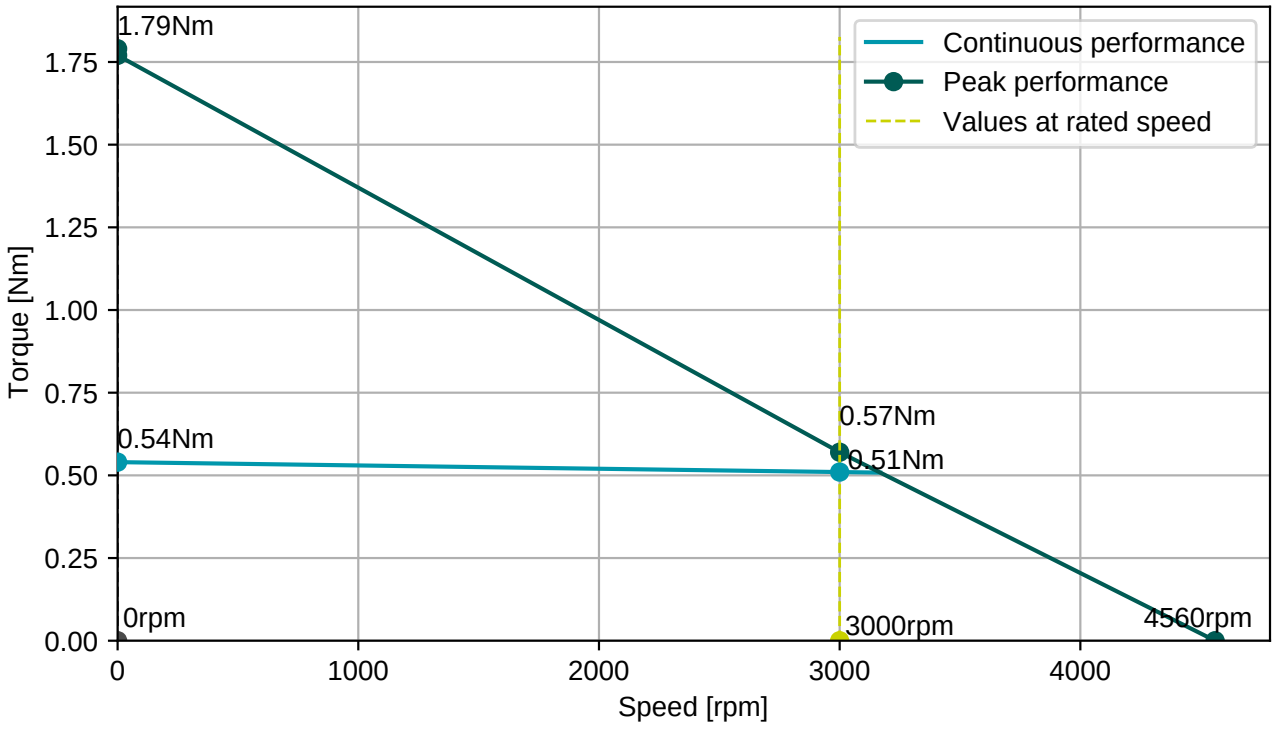

EGA201N00000800000

M15, 9 poles, rotary

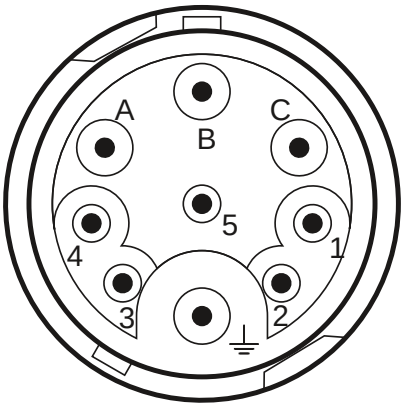

Connector 1 (304)	
A	U
B	V
C	W
PE	PE
1	Brake+
2	Brake-
3	+Us/DSL+
4	GND/DSL-

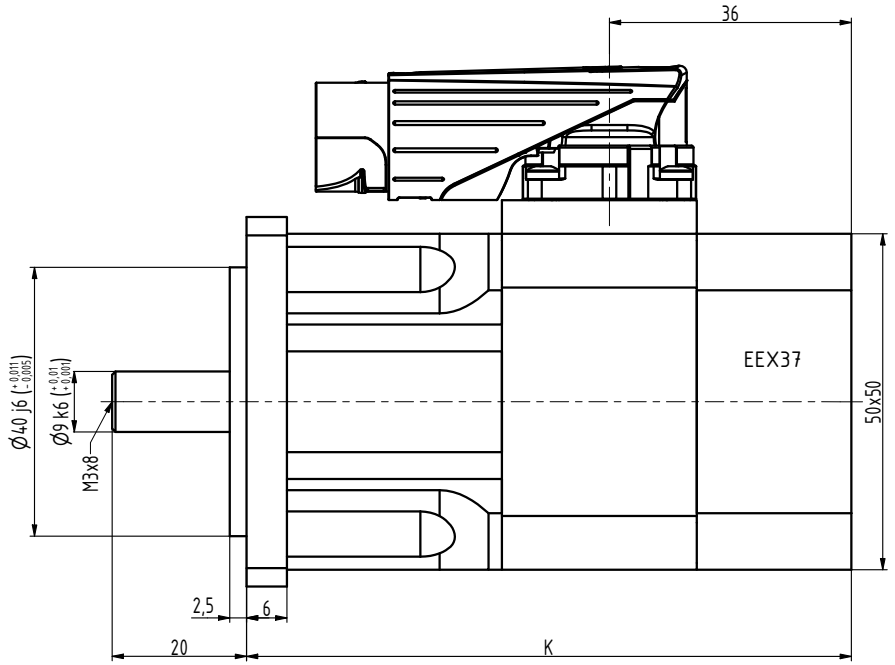

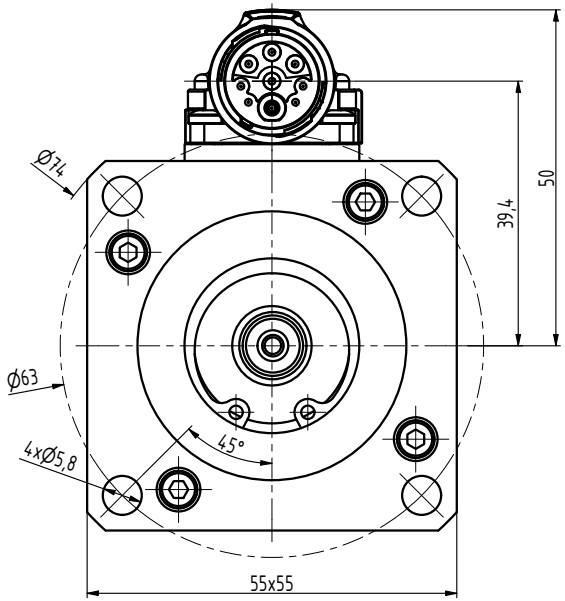

TYP	K
N2-0028	90
N2-0054	105
N2-0075	120
N2-0095	135
N2-0112	150

INDEX	ZMĚNA	DATUM	PODPIS		
ZN.MAT.			T.O.	HMOTNOST kg	MĚŘ.
ROZM.-POLOT.					
POM. ZAŘ.				ČSN	TŘ.Č.
VYPR. Ošlejšek		NORM.REF.		POZN.	Č. KUSOVNÍKU
PŘEKR.					
TECHNOL.		SCHVÁLIL Ošlejšek	01.07.2021	STARÝ V.	Č.V.
NÁZEV	Motor N2			N2068 05 Z_I_S1	
				Listů	List