Engineering data (WIN 819)		
DC bus voltage	320	V DC
Nominal AC voltage	220	V AC (rms)
Rated voltage	190	V AC (rms)
Rated power	402	W
Rated speed	6000	rpm
Rated torque	0.64	Nm
Rated current	1.57	A (rms)
Peak torque	3	Nm
Peak current	7.9	A (rms)
Stall torque	0.75	Nm
Stall current	1.71	A (rms)
No load speed	8220	rpm
EMF constant ±10%	26.5	V AC (rms) / 1000rpm
Theoretical torque constant ±10%	0.44	Nm / A (rms)
Torque constant ±10% @ rated load	0.41	Nm / A (rms)
Number of poles	6	
Electrical time constant	1.35	ms
Winding terminal resistance	13.36	Ω
Rotary field terminal inductance	18	mH

Customs info	
HS Code	85015100

Mechanical data (setting 48)		
Max mechanical speed	12000	rpm
Mech. time constant	1.08	ms
Thermal time constant	12	min
Rotor inertia	0.09	kgcm²
Protection	IP64	
Color	RAL 9005	
Cooling	Convection	
Motor-only mass	1.35	kg
Max. axial force 20kh	39	N
Max. radial force 20kh*	206	N
Max. axial force 100kh	23	N
Max. radial force 100kh*	121	N

** Defined for point of action at ½ output shaft length*

Sensors	
Temperature	PT1000 {PT1000}
Feedback	EKM36 (HDSL) multi-turn, 18+12 bits, SIL2

Brake		
Braking torque	2.00	Nm
Voltage	24	V DC
Power @20°C	11.0	W
Current @20°C	0.46	A
Inertia	0.08	kgcm²
Mass	0.20	kg

Torque / speed curve

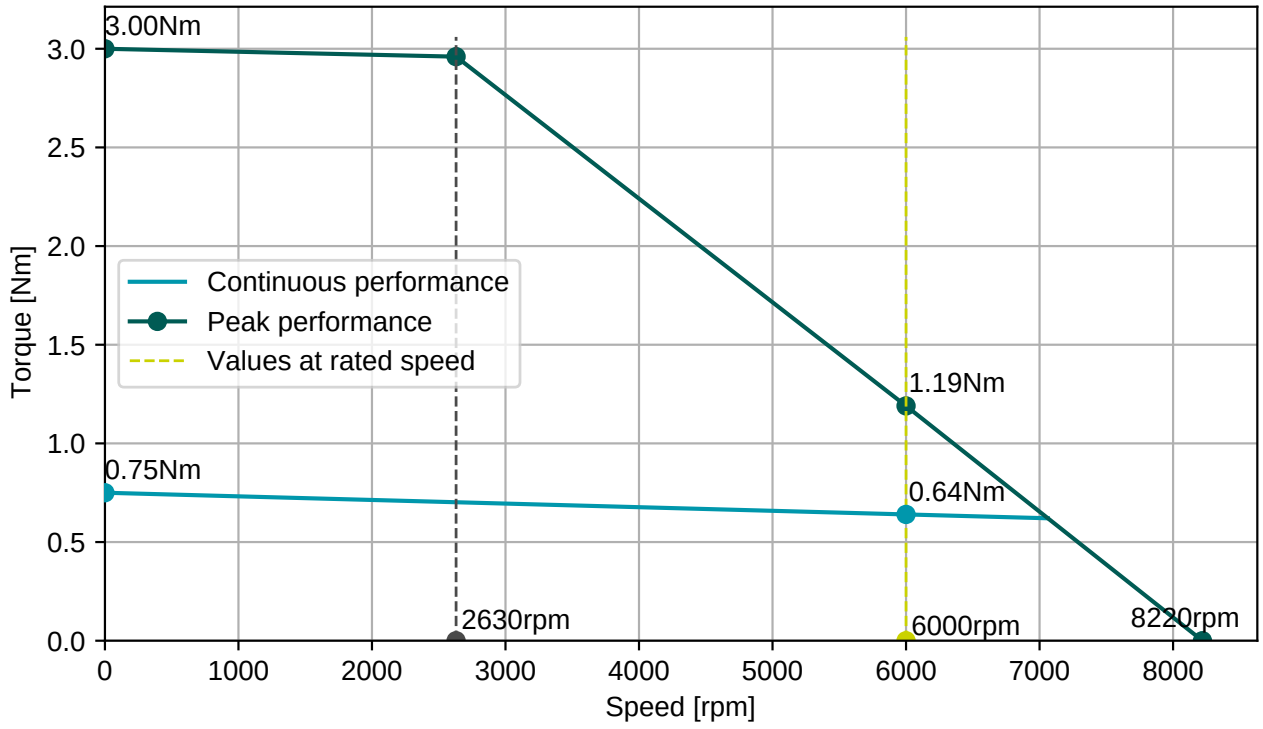

BGC110N00001216000

M23, 8 poles, rotary

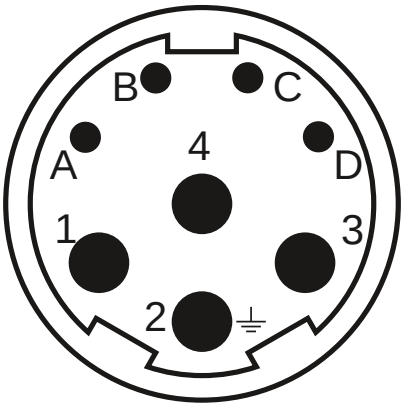

Connector 1 (283)	
1	U
4	V
3	W
2	PE
A	Brake+
B	Brake-
C	GND/DSL-
D	+Us/DSL+

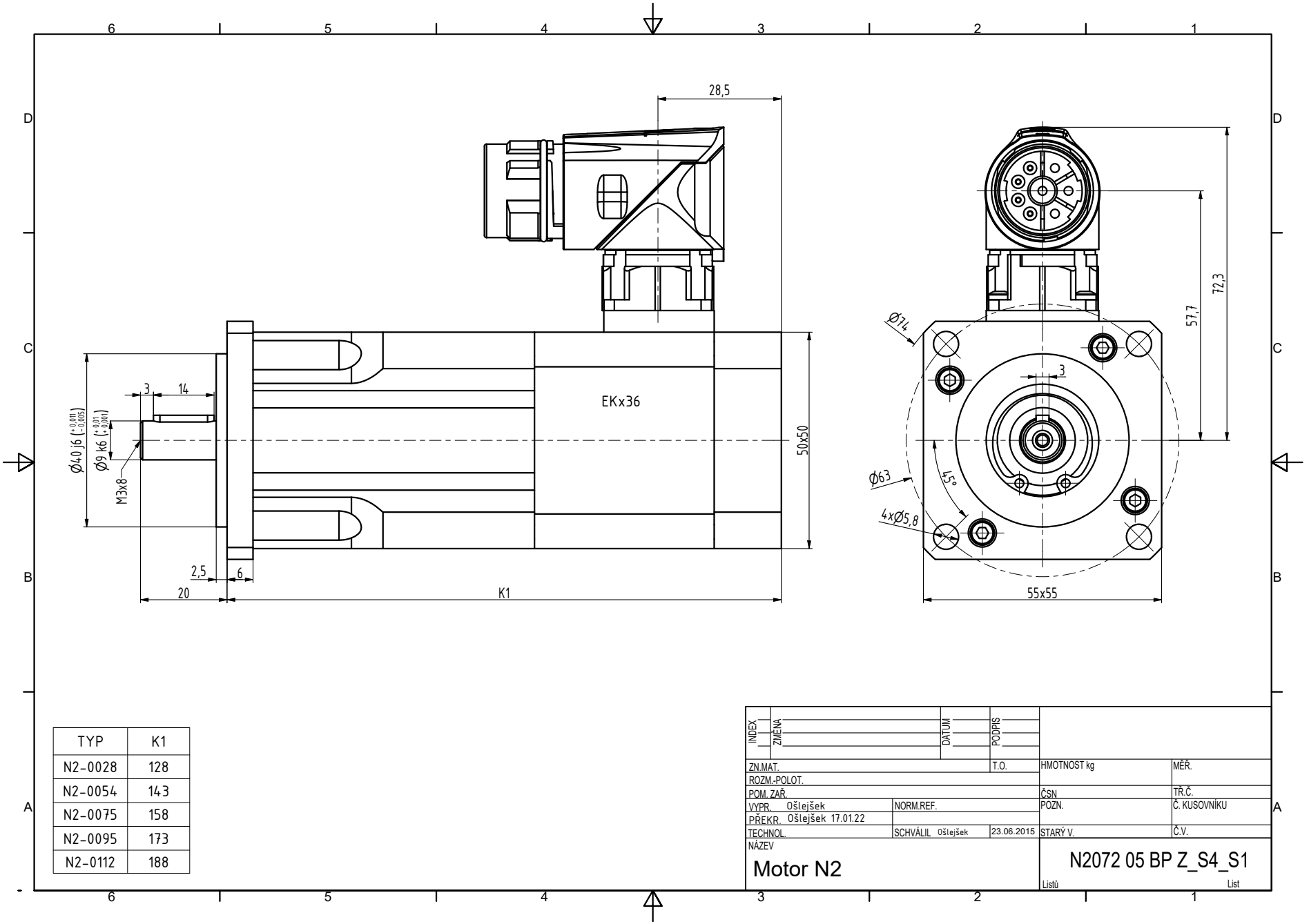

TYP	K1
N2-0028	128
N2-0054	143
N2-0075	158
N2-0095	173
N2-0112	188

INDEX	ZMĚNA	DATUM	PODPIS

ZN.MAT.			T.O.	HMOTNOST kg	MĚŘ.
ROZM.-POLOT.					
POM. ZAŘ.				ČSN	TŘ.Č.
VYPR. Ošlejšek	NORM.REF.			POZN.	Č. KUSOVNÍKU
PŘEKR. Ošlejšek 17.01.22					
TECHNOL.	SCHVÁLIL Ošlejšek	23.06.2015		STARÝ V.	Č.V.

NÁZEV

Motor N2

N2072 05 BP Z_S4_S1

Listů List