| Engineering data (WIN 943) | | |
|---|---|---|
| DC bus voltage | 320 | V DC |
| Nominal AC voltage | 220 | V AC (rms) |
| Rated voltage | 107 | V AC (rms) |
| Rated power | 471 | W |
| Rated speed | 9000 | rpm |
| Rated torque | 0.50 | Nm |
| Rated current | 2.97 | A (rms) |
| Peak torque | 3.8 | Nm |
| Peak current | 24 | A (rms) |
| Stall torque | 0.95 | Nm |
| Stall current | 5.2 | A (rms) |
| No load speed | 19950 | rpm |
| EMF constant ±10% | 11 | V AC (rms) / 1000rpm |
| Theoretical torque constant ±10% | 0.18 | Nm / A (rms) |
| Torque constant ±10% @ rated load | 0.17 | Nm / A (rms) |
| Number of poles | 6 | |
| Electrical time constant | 1.44 | ms |
| Winding terminal resistance | 1.6 | Ω |
| Rotary field terminal inductance | 2.3 | mH |

| Customs info | |
|---|---|
| HS Code | 85015100 |

| Mechanical data (setting 48) | | |
|---|---|---|
| Max mechanical speed | 12000 | rpm |
| Mech. time constant | 0.92 | ms |
| Thermal time constant | 18 | min |
| Rotor inertia | 0.11 | kgcm² |
| Protection | IP64 | |
| Color | RAL 9005 | |
| Cooling | Convection | |
| Motor-only mass | 1.7 | kg |
| Max. axial force 20kh | 33 | N |
| Max. radial force 20kh* | 176 | N |
| Max. axial force 100kh | 20 | N |
| Max. radial force 100kh* | 103 | N |

** Defined for point of action at ½ output shaft length*

| Sensors | |
|---|---|
| Temperature | PT1000 {PT1000} |
| Feedback | EKS36 (HDSL) single-turn, 18 bits, SIL2 |

Torque / speed curve

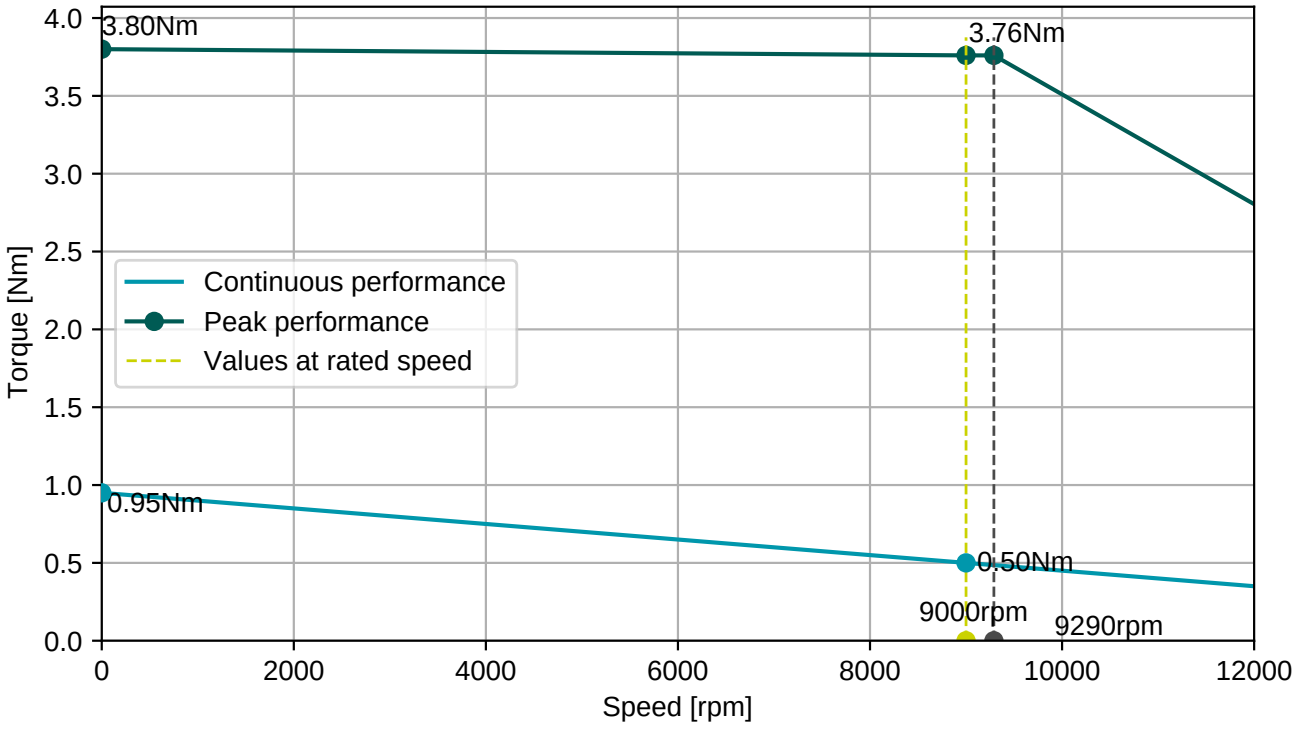


**BGC110N00001216000**

M23, 8 poles, rotary

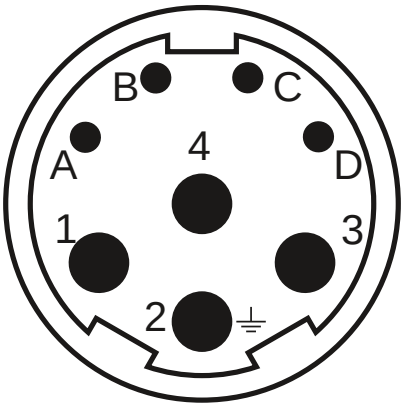


| Connector 1 (283) | |
|---|---|
| **1** | U |
| **4** | V |
| **3** | W |
| **2** | PE |
| **A** | Brake+ |
| **B** | Brake- |
| **C** | GND/DSL- |
| **D** | +Us/DSL+ |

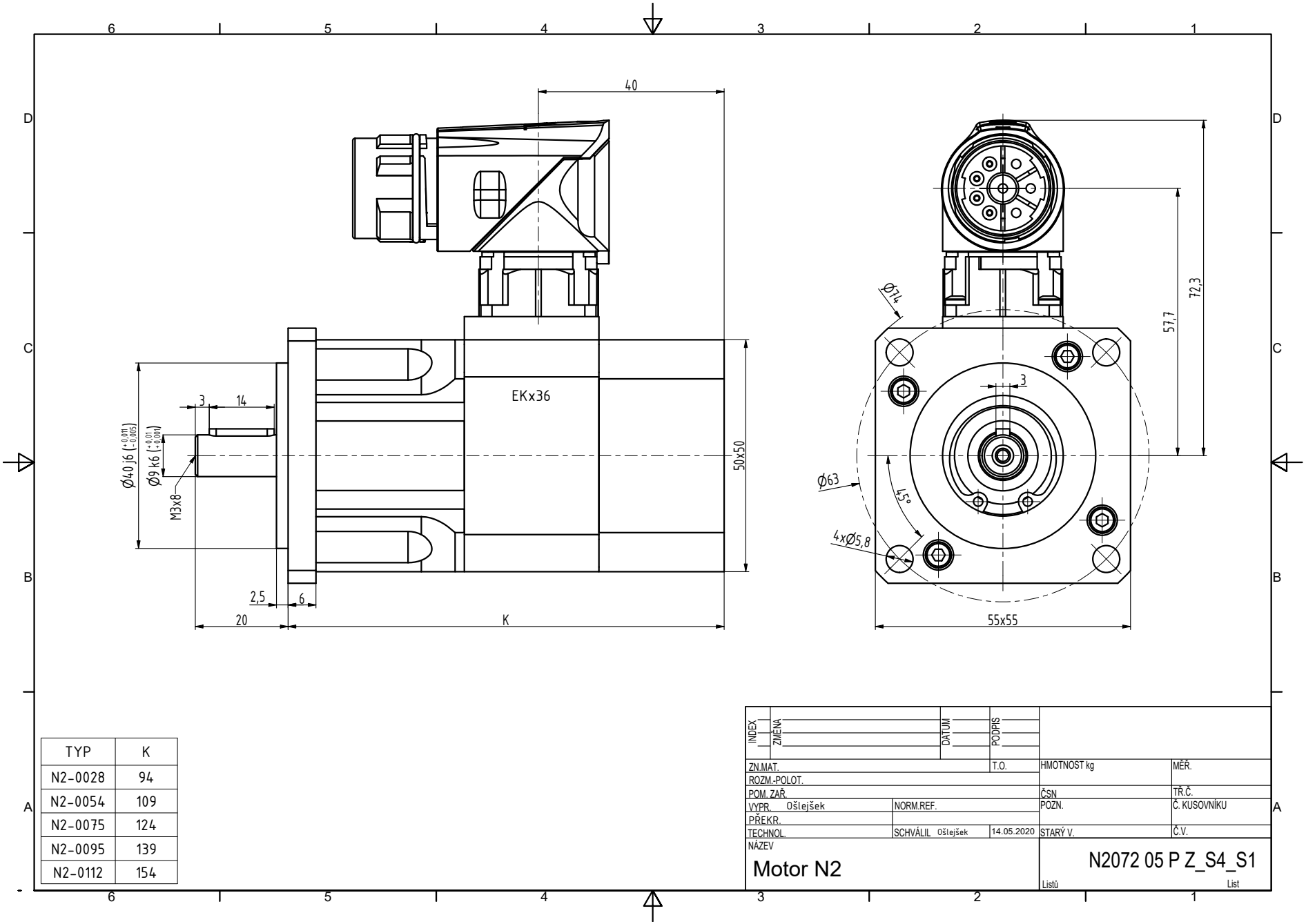


| TYP | K |
|---|---|
| N2-0028 | 94 |
| N2-0054 | 109 |
| N2-0075 | 124 |
| N2-0095 | 139 |
| N2-0112 | 154 |

| INDEX | ZMĚNA | DATUM | PODPIS | | |
|---|---|---|---|---|---|
| ZN.MAT. | | | T.O. | HMOTNOST kg | MĚŘ. |
| ROZM.-POLOT. | | | | | |
| POM. ZAŘ. | | | | ČSN | TŘ.Č. |
| VYPR. Ošlejšek | | NORM.REF. | | POZN. | Č. KUSOVNÍKU |
| PŘEKR. | | | | | |
| TECHNOL. | | SCHVÁLIL Ošlejšek | 14.05.2020 | STARÝ V. | Č.V. |

NÁZEV
Motor N2

N2072 05 P Z_S4_S1

Listů List