Engineering data		
Ratio	32	
Number of stages	2	
Rated output torque	220	Nm
Cycling output torque	260	Nm
Max output torque	415	Nm
Emergency output torque	520	Nm
Rated input speed	3500	rpm
Max input speed	6500	rpm
Efficiency*	95	%
Operating temperature	<-25; 90>	°C
Backlash	< 9	arcmin
Service life	20000	h
Running noise	65	dB(A)
Torsional stiffness	58.75	Nm/arcmin

** at rated speed & torque*

Lubrication	
Type	Standard
Lubricant	Grease (lifetime lubrication)

Customs info	
HS Code	84834090

Mechanical data		
Radial force for 20'000h	2400	N
Radial force for 30'000h	2100	N
Max. radial force	3800	N
Axial force for 20'000h	3300	N
Axial force for 30'000h	3300	N
Max. axial force	5200	N
Protection	IP54	
Input inertia	1.43	kgcm2
Mass	8.31	kg
Tilting moment for 20'000h	109	Nm
Tilting moment for 30'000h	96	Nm
Max. bending moment	40	Nm
Output shaft design	Flange with dowel hole	

Supported motors	
Motor types	TGN5, TGT5, TGH5
Clamping diameter	24 mm
Input flange	Motor adaptation - one part
Installation position	Any

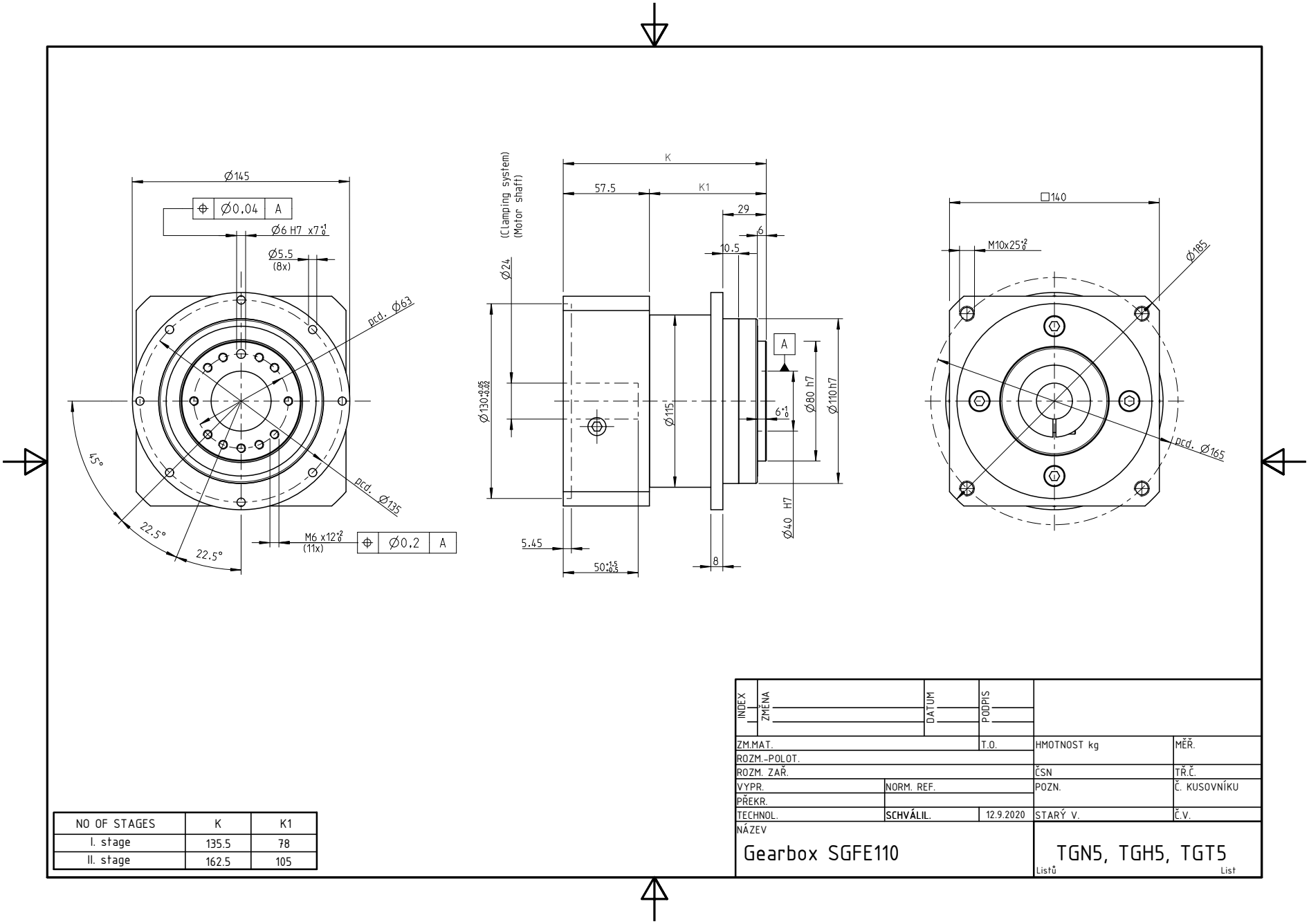

NO OF STAGES	K	K1
I. stage	135.5	78
II. stage	162.5	105

INDEX	ZMĚNA	DATUM	PODPIS	
ZM.MAT.		T.O.	HMOTNOST kg	MĚŘ.
ROZM.-POLOT.				
ROZM. ZAŘ.			ČSN	TŘ.Č.
VYPR.	NORM. REF.		POZN.	Č. KUSOVNÍKU
PŘEKR.				
TECHNOL.	SCHVÁLIL.	12.9.2020	STARÝ V.	Č.V.

NÁZEV

Gearbox SGFE110

TGN5, TGH5, TGT5

Listů List