Engineering data		
Ratio	100	
Number of stages	2	
Rated output torque	32	Nm
Cycling output torque	38	Nm
Max output torque	60	Nm
Emergency output torque	200	Nm
Rated input speed	4000	rpm
Max input speed	7000	rpm
Efficiency*	82	%
Operating temperature	<-25; 90>	°C
Backlash	< 9	arcmin
Service life	20000	h
Running noise	60	dB(A)
Torsional stiffness	27.70	Nm/arcmin

** at rated speed & torque*

Lubrication	
Type	Standard
Lubricant	Grease (lifetime lubrication)

Customs info	
HS Code	84834090

Mechanical data		
Radial force for 20'000h	1400	N
Radial force for 30'000h	1200	N
Max. radial force	2200	N
Axial force for 20'000h	3000	N
Axial force for 30'000h	3000	N
Max. axial force	3300	N
Protection	IP54	
Input inertia	0.36	kgcm2
Mass	3.70	kg
Tilting moment for 20'000h	46	Nm
Tilting moment for 30'000h	40	Nm
Max. bending moment	16	Nm
Output shaft design	Flange with dowel hole	

Supported motors		
Motor types	TGN3, TGT3, TGH3	
Clamping diameter	19	mm
Input flange	Motor adaptation - one part	
Installation position	Any	

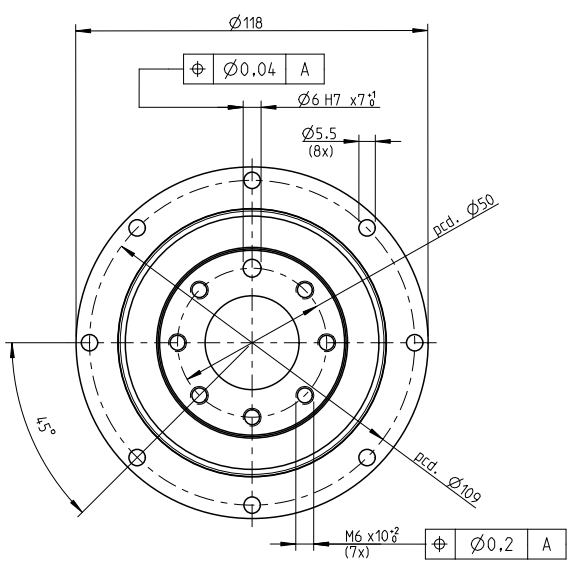

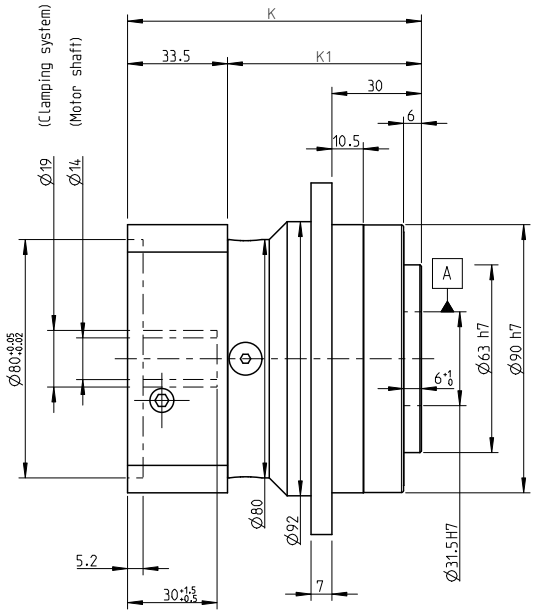

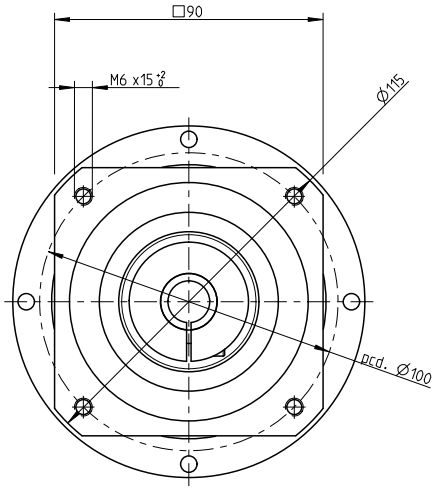

NO OF STAGES	K	K1
I. stage	98.5	65
II. stage	116	82.5

INDEX	ZMĚNA	DATUM	PODPIS	
ZM.MAT.		T.O.	HMOTNOST kg	MĚŘ.
ROZM.-POLOT.				
ROZM. ZAŘ.			ČSN	TŘ.Č.
VYPR.	NORM. REF.		POZN.	Č. KUSOVNÍKU
PŘEKR.				
TECHNOL.	SCHVÁLIL.	12.9.2020	STARÝ V.	Č.V.

NÁZEV

Gearbox SGFE090

TGN3, TGH3, TGT3

Listů List