Engineering data		
Ratio	4	
Number of stages	1	
Rated output torque	23	Nm
Cycling output torque	38	Nm
Max output torque	40	Nm
Emergency output torque	50	Nm
Rated input speed	4400	rpm
Max input speed	13000	rpm
Efficiency*	97	%
Operating temperature	<-25; 90>	°C
Backlash	< 10	arcmin
Service life	20000	h
Running noise	58	dB(A)
Torsional stiffness	8.25	Nm/arcmin

** at rated speed & torque*

Lubrication	
Type	Standard
Lubricant	Grease (lifetime lubrication)

Customs info	
HS Code	84834090

Mechanical data		
Radial force for 20'000h	550	N
Radial force for 30'000h	500	N
Max. radial force	900	N
Axial force for 20'000h	1200	N
Axial force for 30'000h	1200	N
Max. axial force	1200	N
Protection	IP54	
Input inertia	0.14	kgcm2
Mass	1.09	kg
Tilting moment for 20'000h	12	Nm
Tilting moment for 30'000h	11	Nm
Max. bending moment	12	Nm
Output shaft design	Flange with dowel hole	

Supported motors		
Motor types	TGN2, TGT2, TGH2	
Clamping diameter	11	mm
Input flange	Motor adaptation - one part	
Installation position	Any	

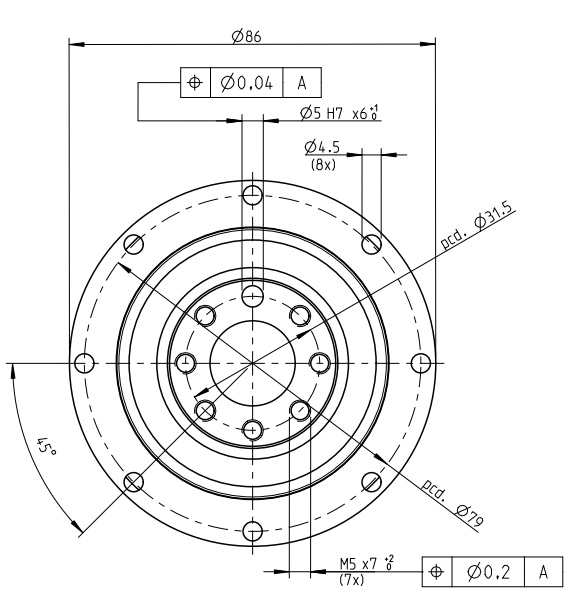

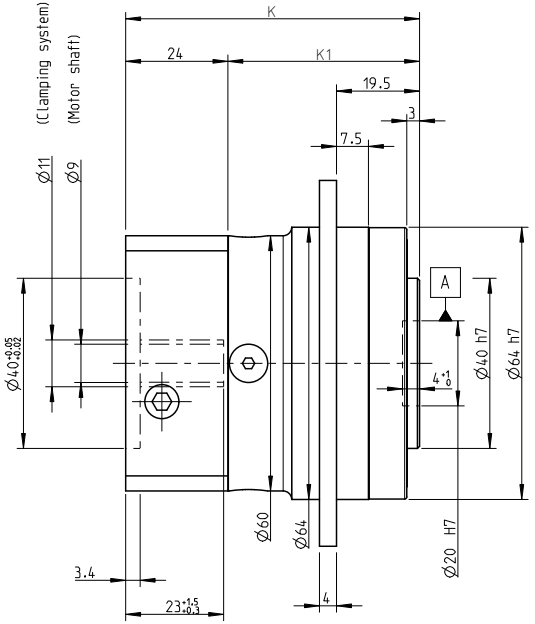

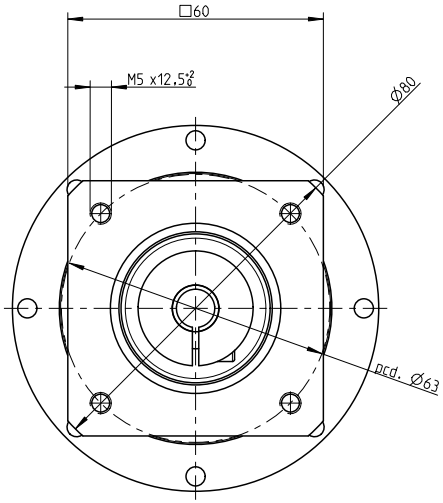

NO OF STAGES	K	K1
I. stage	69	45
II. stage	81.5	57.5

INDEX	ZMĚNA	DATUM	PODPIS		
ZM.MAT.		T.O.	HMOTNOST kg	MĚŘ.	
ROZM.-POLOT.					
ROZM. ZAŘ.			ČSN	TŘ.Č.	
VYPR.	NORM. REF.		POZN.	Č. KUSOVNÍKU	
PŘEKR.					
TECHNOL.	SCHVÁLIL.	12.9.2020	STARÝ V.	Č.V.	

NÁZEV

Gearbox SGFE064

TGN2, TGH2, TGT2

Listů List