Engineering data		
Ratio	7	
Number of stages	1	
Rated output torque	114	Nm
Cycling output torque	135	Nm
Max output torque	215	Nm
Emergency output torque	340	Nm
Rated input speed	3500	rpm
Max input speed	6500	rpm
Efficiency*	97	%
Operating temperature	<-25; 90>	°C
Backlash	< 7	arcmin
Service life	20000	h
Running noise	65	dB(A)
Torsional stiffness	16.30	Nm/arcmin

** at rated speed & torque*

Lubrication	
Type	Standard
Lubricant	Grease (lifetime lubrication)

Customs info	
HS Code	84834090

Mechanical data		
Radial force for 20'000h*	2950	N
Radial force for 30'000h*	2400	N
Max. radial force*	4000	N
Axial force for 20'000h	2500	N
Axial force for 30'000h	2100	N
Max. axial force	3800	N
Protection	IP54	
Input inertia	1.47	kgcm2
Mass	6.52	kg
Tilting moment for 20'000h	232	Nm
Tilting moment for 30'000h	188	Nm
Max. bending moment	40	Nm
Output shaft design	Shaft key	

** Defined for point of action at ½ output shaft length*

Supported motors	
Motor types	TGN6, TGT6
Clamping diameter	24 mm
Input flange	Motor adaptation - one part
Installation position	Any

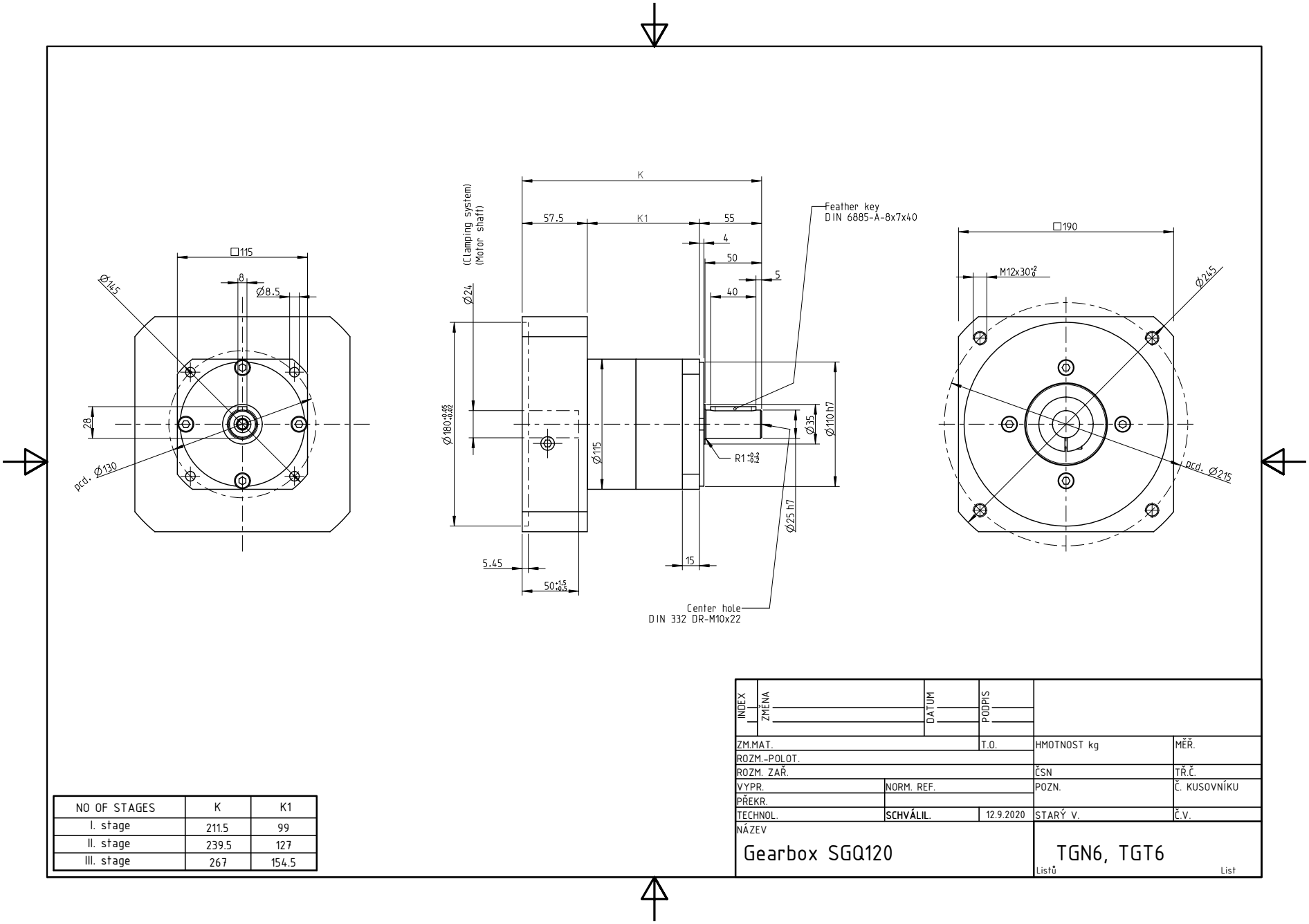

NO OF STAGES	K	K1
I. stage	211.5	99
II. stage	239.5	127
III. stage	267	154.5

INDEX	ZMĚNA	DATUM	PODPIS		
ZM.MAT.			T.O.	HMOTNOST kg	MĚŘ.
ROZM.-POLOT.					
ROZM. ZAŘ.				ČSN	TŘ.Č.
VYPR.		NORM. REF.		POZN.	Č. KUSOVNÍKU
PŘEKR.					
TECHNOL.		SCHVÁLIL.	12.9.2020	STARÝ V.	Č.V.

NÁZEV

Gearbox SGQ120

TGN6, TGT6

Listů List