Engineering data		
Ratio	100	
Number of stages	3	
Rated output torque	102	Nm
Cycling output torque	120	Nm
Max output torque	192	Nm
Emergency output torque	240	Nm
Rated input speed	4000	rpm
Max input speed	7000	rpm
Efficiency*	90	%
Operating temperature	<-25; 90>	°C
Backlash	< 11	arcmin
Service life	20000	h
Running noise	60	dB(A)
Torsional stiffness	11.40	Nm/arcmin

** at rated speed & torque*

Lubrication	
Type	Standard
Lubricant	Grease (lifetime lubrication)

Customs info	
HS Code	84834090

Mechanical data		
Radial force for 20'000h*	2050	N
Radial force for 30'000h*	1700	N
Max. radial force*	2500	N
Axial force for 20'000h	2500	N
Axial force for 30'000h	2000	N
Max. axial force	3800	N
Protection	IP54	
Input inertia	0.40	kgcm2
Mass	3.91	kg
Tilting moment for 20'000h	101	Nm
Tilting moment for 30'000h	84	Nm
Max. bending moment	16	Nm
Output shaft design	Smooth shaft	

** Defined for point of action at ½ output shaft length*

Supported motors	
Motor types	TGN4, TGT4, TGH4
Clamping diameter	19 mm
Input flange	Motor adaptation - one part
Installation position	Any

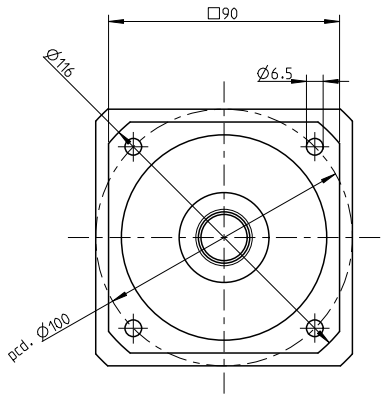

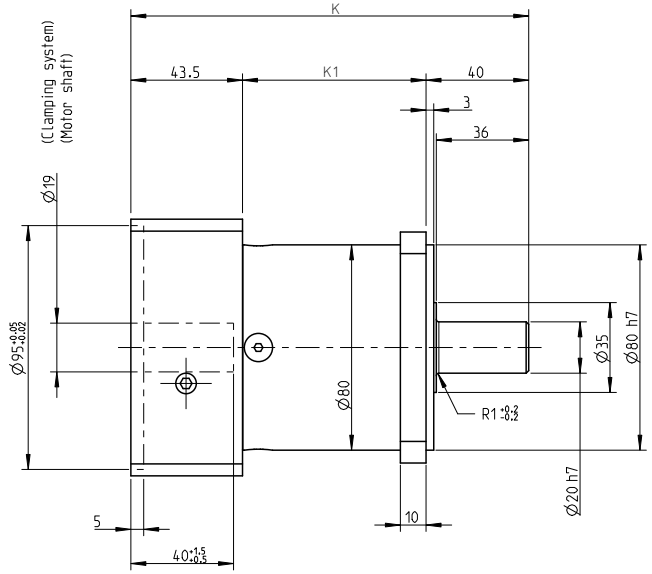

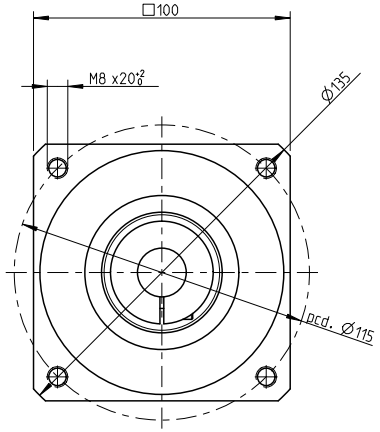

NO OF STAGES	K	K1
I. stage	155	71.5
II. stage	172.5	89
III. stage	190	106.5

INDEX	ZMĚNA	DATUM	PODPIS		
ZM.MAT.			T.O.	HMOTNOST kg	MĚŘ.
ROZM.-POLOT.					
ROZM. ZAŘ.				ČSN	TŘ.Č.
VYPR.		NORM. REF.		POZN.	Č. KUSOVNÍKU
PŘEKR.					
TECHNOL.		SCHVÁLIL.	12.9.2020	STARÝ V.	Č.V.

NÁZEV

Gearbox SGQ080

TGN4, TGH4, TGT4

Listů List