| Engineering data | | |
|---|---|---|
| Ratio | 8 | |
| Number of stages | 1 | |
| Rated output torque | 15 | Nm |
| Cycling output torque | 18 | Nm |
| Max output torque | 28 | Nm |
| Emergency output torque | 80 | Nm |
| Rated input speed | 4500 | rpm |
| Max input speed | 13000 | rpm |
| Efficiency* | 97 | % |
| Operating temperature | <-25; 90> | °C |
| Backlash | < 10 | arcmin |
| Service life | 20000 | h |
| Running noise | 60 | dB(A) |
| Torsional stiffness | 3.40 | Nm/arcmin |

** at rated speed & torque*

| Lubrication | |
|---|---|
| Type | Standard |
| Lubricant | Grease (lifetime lubrication) |

| Customs info | |
|---|---|
| HS Code | 84834090 |

| Mechanical data | | |
|---|---|---|
| Radial force for 20'000h* | 900 | N |
| Radial force for 30'000h* | 700 | N |
| Max. radial force* | 1500 | N |
| Axial force for 20'000h | 1000 | N |
| Axial force for 30'000h | 800 | N |
| Max. axial force | 1950 | N |
| Protection | IP54 | |
| Input inertia | 0.07 | kgcm2 |
| Mass | 1.09 | kg |
| Tilting moment for 20'000h | 37 | Nm |
| Tilting moment for 30'000h | 29 | Nm |
| Max. bending moment | 12 | Nm |
| Output shaft design | Shaft key | |

** Defined for point of action at ½ output shaft length*

| Supported motors | |
|---|---|
| Motor types | TGN2, TGT2, TGH2 |
| Clamping diameter | 11 mm |
| Input flange | Motor adaptation - one part |
| Installation position | Any |

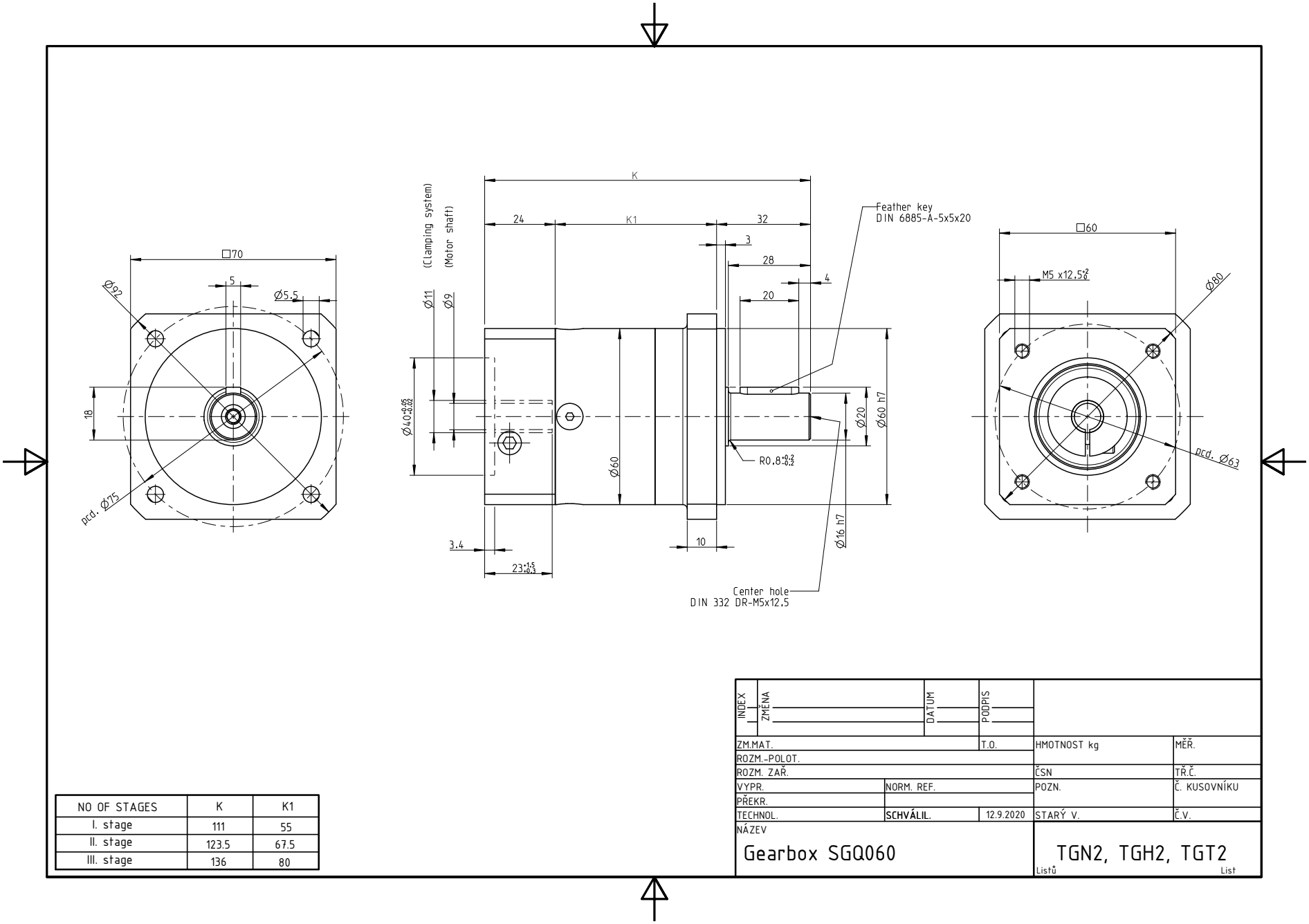


| NO OF STAGES | K | K1 |
|---|---|---|
| I. stage | 111 | 55 |
| II. stage | 123.5 | 67.5 |
| III. stage | 136 | 80 |

| INDEX | ZMĚNA | DATUM | PODPIS | | |
|---|---|---|---|---|---|
| | | | | | |
| ZM.MAT. | | | T.O. | HMOTNOST kg | MĚŘ. |
| ROZM.-POLOT. | | | | | |
| ROZM. ZAŘ. | | | | ČSN | TŘ.Č. |
| VYPR. | | NORM. REF. | | POZN. | Č. KUSOVNÍKU |
| PŘEKR. | | | | | |
| TECHNOL. | | SCHVÁLIL. | 12.9.2020 | STARÝ V. | Č.V. |

NÁZEV

Gearbox SGQ060

TGN2, TGH2, TGT2

Listů List