Engineering data		
Ratio	20	
Number of stages	2	
Rated output torque	900	Nm
Cycling output torque	1800	Nm
Max output torque	2880	Nm
Emergency output torque	3600	Nm
Rated input speed	1350	rpm
Max input speed	6500	rpm
Efficiency*	96	%
Operating temperature	<-25; 90>	°C
Backlash	< 5	arcmin
Service life	20000	h
Running noise	74	dB(A)
Torsional stiffness	532.00	Nm/arcmin

** at rated speed & torque*

Lubrication	
Type	Standard
Lubricant	Castrol Optigear Synthetic 800/150

Customs info	
HS Code	84834090

Mechanical data		
Radial force for 20'000h	33000	N
Radial force for 30'000h	29500	N
Max. radial force	33000	N
Axial force for 20'000h	15000	N
Axial force for 30'000h	13500	N
Max. axial force	15000	N
Protection	IP65	
Input inertia	9.51	kgcm2
Mass	42.32	kg
Tilting moment for 20'000h	4957	Nm
Tilting moment for 30'000h	4431	Nm
Max. bending moment	180	Nm
Output shaft design	Flange	

Supported motors	
Motor types	TGN6, TGT6
Clamping diameter	35 mm
Input flange	Motor adaptation - 2 part, square universal flange
Installation position	Any

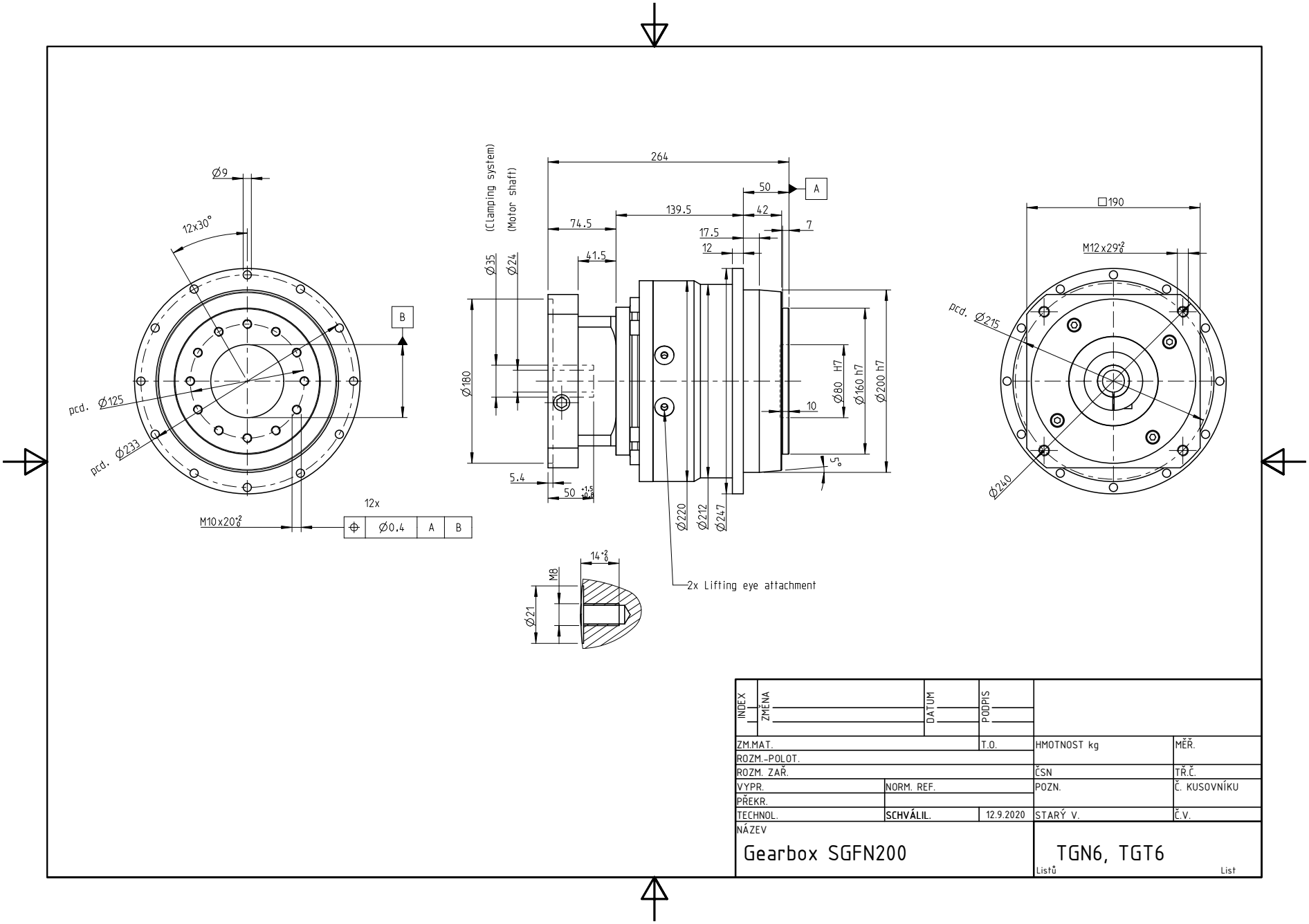

INDEX	ZMĚNA	DATUM	PODPIS	

ZM.MAT.		T.O.	HMOTNOST kg	MĚŘ.
ROZM.-POLOT.				
ROZM. ZAŘ.			ČSN	TŘ.Č.
VYPR.	NORM. REF.		POZN.	Č. KUSOVNÍKU
PŘEKR.				
TECHNOL.	SCHVÁLIL.	12.9.2020	STARÝ V.	Č.V.

NÁZEV

Gearbox SGFN200

TGN6, TGT6

Listů List