| Engineering data | | |
|---|---|---|
| Ratio | 10 | |
| Number of stages | 1 | |
| Rated output torque | 30 | Nm |
| Cycling output torque | 60 | Nm |
| Max output torque | 96 | Nm |
| Emergency output torque | 121 | Nm |
| Rated input speed | 4000 | rpm |
| Max input speed | 10000 | rpm |
| Efficiency* | 95 | % |
| Operating temperature | <-25; 90> | °C |
| Backlash | < 3 | arcmin |
| Service life | 20000 | h |
| Running noise | 62 | dB(A) |
| Torsional stiffness | 35.00 | Nm/arcmin |

** at rated speed & torque*

| Lubrication | |
|---|---|
| Type | Standard |
| Lubricant | Castrol Optigear Synthetic 800/150 |

| Customs info | |
|---|---|
| HS Code | 84834090 |

| Mechanical data | | |
|---|---|---|
| Radial force for 20'000h | 3950 | N |
| Radial force for 30'000h | 3500 | N |
| Max. radial force | 3950 | N |
| Axial force for 20'000h | 8200 | N |
| Axial force for 30'000h | 7200 | N |
| Max. axial force | 8200 | N |
| Protection | IP65 | |
| Input inertia | 0.58 | kgcm2 |
| Mass | 2.94 | kg |
| Tilting moment for 20'000h | 326 | Nm |
| Tilting moment for 30'000h | 289 | Nm |
| Max. bending moment | 38 | Nm |
| Output shaft design | Flange | |

| Supported motors | |
|---|---|
| Motor types | TGN3, TGT3, TGH3 |
| Clamping diameter | 19 mm |
| Input flange | Motor adaptation - 2 part, round universal flange |
| Installation position | Any |

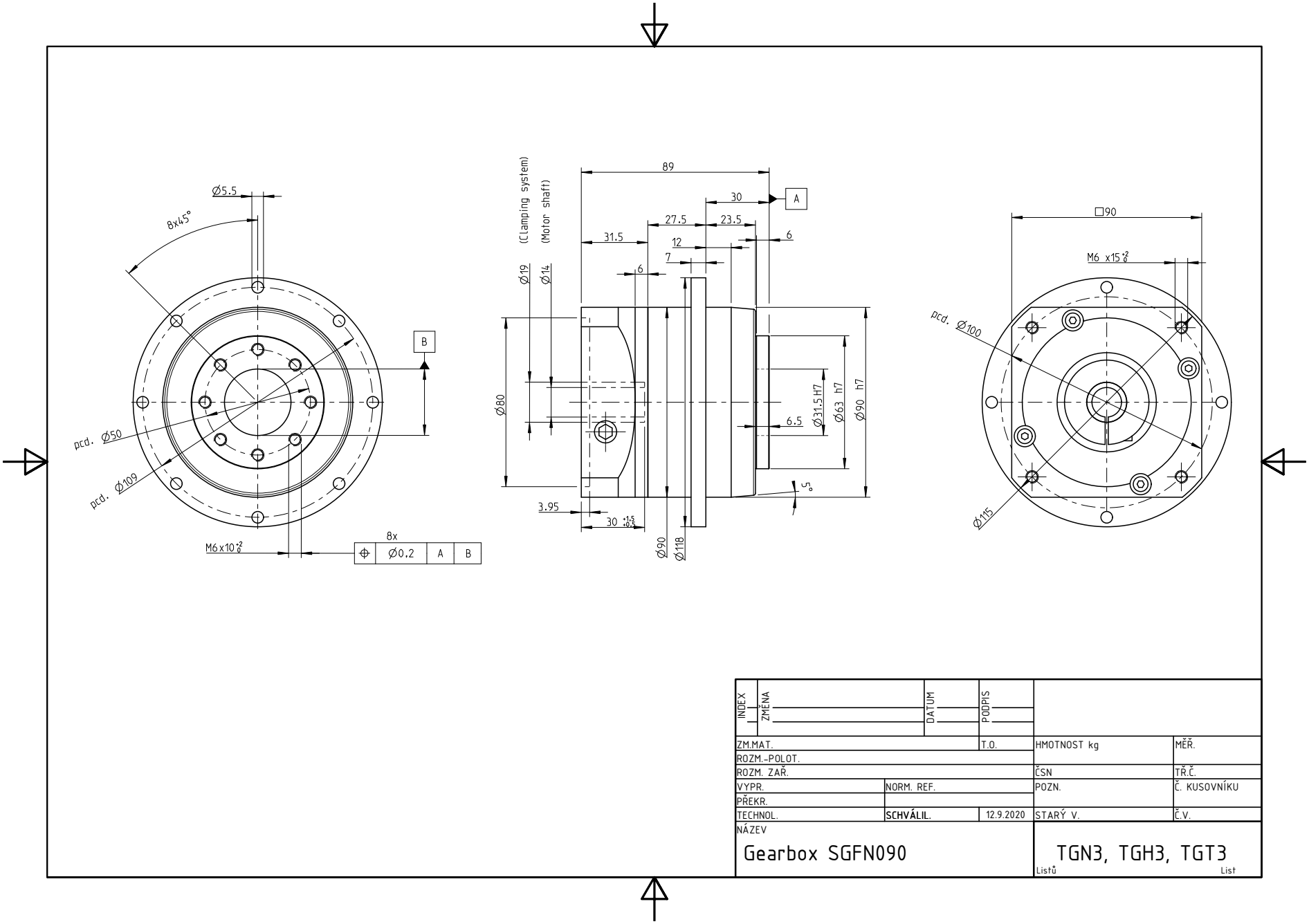


| INDEX | ZMĚNA | DATUM | PODPIS | |
|---|---|---|---|---|
| | | | | |

| | | | | |
|---|---|---|---|---|
| ZM.MAT. | | T.O. | HMOTNOST kg | MĚŘ. |
| ROZM.-POLOT. | | | | |
| ROZM. ZAŘ. | | | ČSN | TŘ.Č. |
| VYPR. | NORM. REF. | | POZN. | Č. KUSOVNÍKU |
| PŘEKR. | | | | |
| TECHNOL. | **SCHVÁLIL.** | 12.9.2020 | STARÝ V. | Č.V. |

NÁZEV

Gearbox SGFN090

TGN3, TGH3, TGT3

Listů List