Engineering data		
Ratio	10	
Number of stages	1	
Rated output torque	62	Nm
Cycling output torque	125	Nm
Max output torque	200	Nm
Emergency output torque	295	Nm
Rated input speed	3150	rpm
Max input speed	8500	rpm
Efficiency*	95	%
Operating temperature	<-25; 90>	°C
Backlash	< 3	arcmin
Service life	20000	h
Running noise	65	dB(A)
Torsional stiffness	77.00	Nm/arcmin

** at rated speed & torque*

Lubrication	
Type	Standard
Lubricant	Castrol Optigear Synthetic 800/150

Customs info	
HS Code	84834090

Mechanical data		
Radial force for 20'000h	4900	N
Radial force for 30'000h	4350	N
Max. radial force	4900	N
Axial force for 20'000h	9500	N
Axial force for 30'000h	8400	N
Max. axial force	9500	N
Protection	IP65	
Input inertia	2.04	kgcm2
Mass	4.91	kg
Tilting moment for 20'000h	475	Nm
Tilting moment for 30'000h	422	Nm
Max. bending moment	80	Nm
Output shaft design	Flange with dowel hole	

Supported motors	
Motor types	TGN6, TGT6
Clamping diameter	24 mm
Input flange	Motor adaptation - 2 part, round universal flange
Installation position	Any

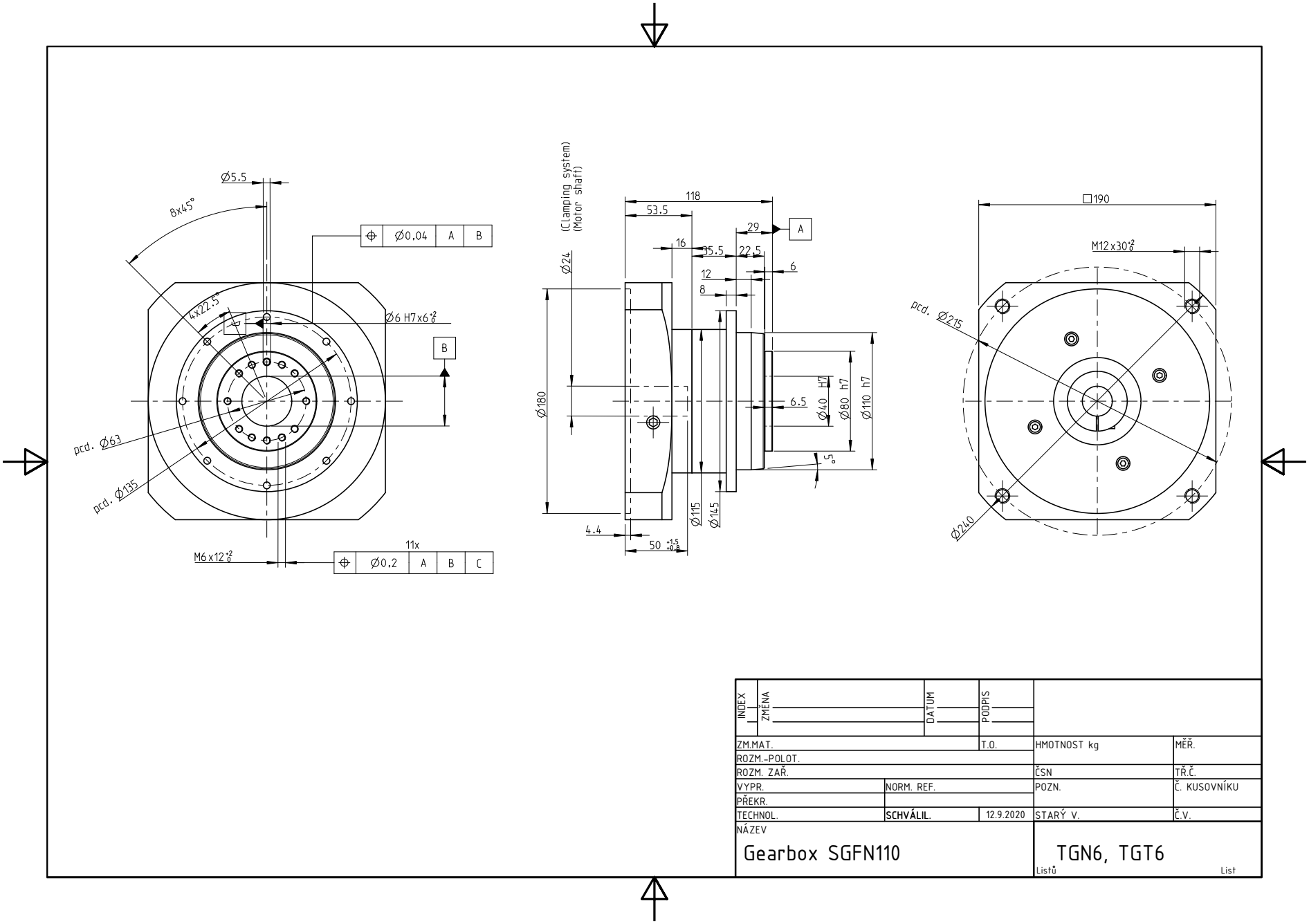

INDEX	ZMĚNA	DATUM	PODPIS	

ZM.MAT.		T.O.	HMOTNOST kg	MĚŘ.
ROZM.-POLOT.				
ROZM. ZAŘ.			ČSN	TŘ.Č.
VYPR.	NORM. REF.		POZN.	Č. KUSOVNÍKU
PŘEKR.				
TECHNOL.	SCHVÁLIL.	12.9.2020	STARÝ V.	Č.V.

NÁZEV

Gearbox SGFN110

TGN6, TGT6

Listů List