Engineering data		
Ratio	40	
Number of stages	2	
Rated output torque	70	Nm
Cycling output torque	140	Nm
Max output torque	220	Nm
Emergency output torque	300	Nm
Rated input speed	4500	rpm
Max input speed	14000	rpm
Efficiency*	93	%
Operating temperature	<-25; 90>	°C
Backlash	< 5	arcmin
Service life	20000	h
Running noise	62	dB(A)
Torsional stiffness	32.50	Nm/arcmin

** at rated speed & torque*

Lubrication	
Type	Standard
Lubricant	Castrol Optigear Synthetic 800/150

Customs info	
HS Code	84834090

Mechanical data		
Radial force for 20'000h	3950	N
Radial force for 30'000h	3500	N
Max. radial force	3950	N
Axial force for 20'000h	8200	N
Axial force for 30'000h	7200	N
Max. axial force	8200	N
Protection	IP65	
Input inertia	0.21	kgcm2
Mass	3.36	kg
Tilting moment for 20'000h	326	Nm
Tilting moment for 30'000h	289	Nm
Max. bending moment	18	Nm
Output shaft design	Flange with dowel hole	

Supported motors	
Motor types	TGN3, TGT3, TGH3
Clamping diameter	14 mm
Input flange	Motor adaptation - 2 part, round universal flange
Installation position	Any

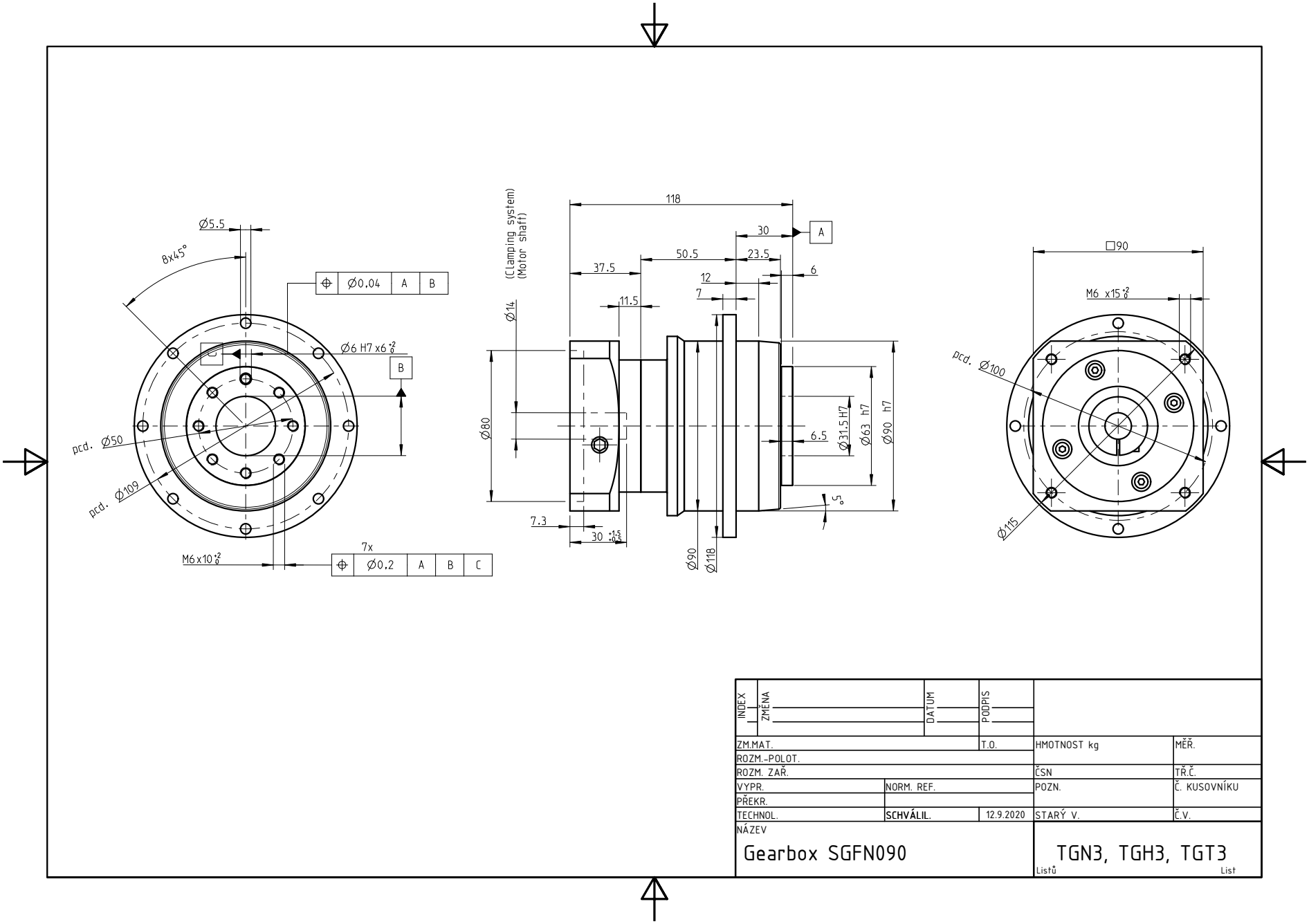

INDEX	ZMĚNA	DATUM	PODPIS	

ZM.MAT.		T.O.	HMOTNOST kg	MĚŘ.
ROZM.-POLOT.				
ROZM. ZAŘ.			ČSN	TŘ.Č.
VYPR.	NORM. REF.		POZN.	Č. KUSOVNÍKU
PŘEKR.				
TECHNOL.	**SCHVÁLIL.**	12.9.2020	STARÝ V.	Č.V.
NÁZEV				
Gearbox SGFN090			TGN3, TGH3, TGT3	
			Listů	List