Engineering data		
Ratio	40	
Number of stages	1	
Rated output torque	110	Nm
Max output torque	176	Nm
Emergency output torque	220	Nm
Rated input speed	4000	rpm
Max input speed	7000	rpm
Efficiency*	94	%
Operating temperature	<-25; 90>	°C
Backlash	< 9	arcmin
Service life	20000	h
Running noise	60	dB(A)
Torsional stiffness	12.00	Nm/arcmin

** at rated speed & torque*

Lubrication	
Type	Standard
Lubricant	Grease (lifetime lubrication)

Customs info	
HS Code	84834090

Mechanical data		
Radial force for 20'000h*	2050	N
Radial force for 30'000h*	1700	N
Max. radial force*	2500	N
Axial force for 20'000h	2500	N
Axial force for 30'000h	2000	N
Max. axial force	3800	N
Protection	IP54	
Input inertia	0.37	kgcm2
Mass	3.40	kg
Tilting moment for 20'000h	102	Nm
Tilting moment for 30'000h	84	Nm
Max. bending moment	12	Nm
Output shaft design	Shaft key	

** Defined for point of action at ½ output shaft length*

Supported motors		
Motor types	TGMA	
Clamping diameter	19	mm
Input flange	Motor adaptation - one part	
Installation position	Any	

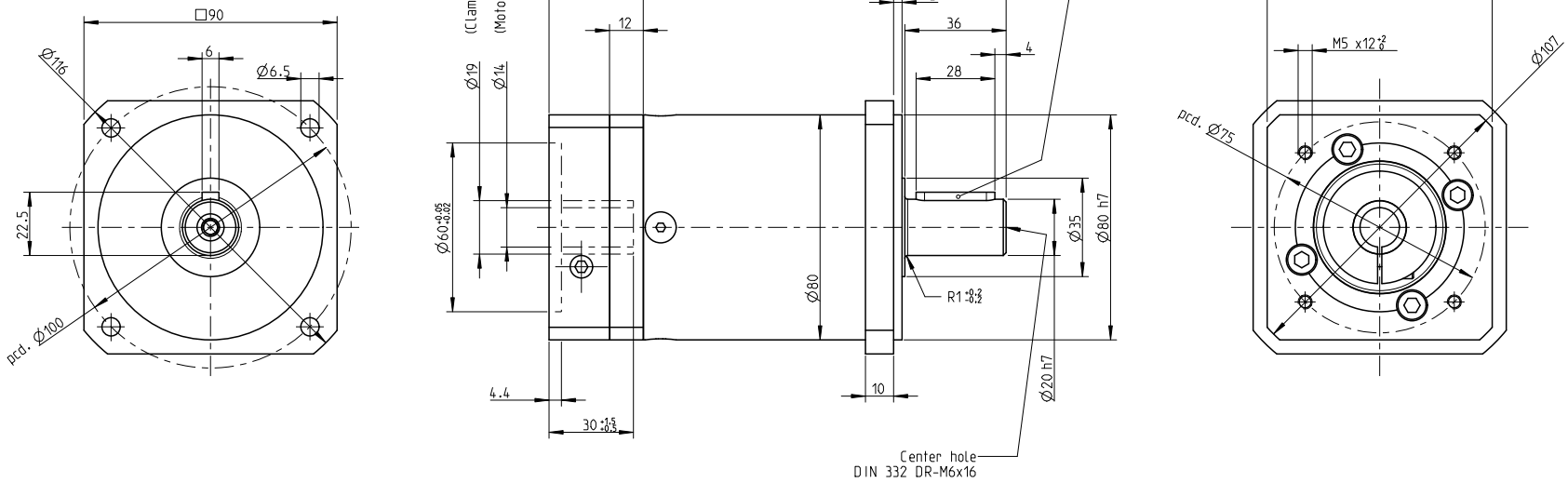

INDEX	ZMĚNA	DATUM	PODPIS	

ZM.MAT.		T.O.	HMOTNOST kg	MĚŘ.
ROZM.-POLOT.				
ROZM. ZAŘ.			ČSN	TŘ.Č.
VYPR.	NORM. REF.		POZN.	Č. KUSOVNÍKU
PŘEKR.				
TECHNOL.	**SCHVÁLIL.**	12.9.2020	STARÝ V.	Č.V.
NÁZEV				
Gearbox SGQ080			TGMA	
			Listů	List