Engineering data		
Ratio	10	
Number of stages	1	
Rated output torque	315	Nm
Cycling output torque	630	Nm
Max output torque	1000	Nm
Emergency output torque	1350	Nm
Rated input speed	1300	rpm
Max input speed	6000	rpm
Efficiency*	95	%
Operating temperature	<-25; 90>	°C
Backlash	< 1	arcmin
Service life	20000	h
Running noise	74	dB(A)
Torsional stiffness	520.00	Nm/arcmin

** at rated speed & torque*

Lubrication	
Type	Standard
Lubricant	Castrol Optigear Synthetic 800/150

Customs info	
HS Code	84834090

Mechanical data		
Radial force for 20'000h	33000	N
Radial force for 30'000h	29500	N
Max. radial force	33000	N
Axial force for 20'000h	25000	N
Axial force for 30'000h	25000	N
Max. axial force	29500	N
Protection	IP65	
Input inertia	26.88	kgcm2
Mass	38.75	kg
Tilting moment for 20'000h	4957	Nm
Tilting moment for 30'000h	4431	Nm
Max. bending moment	300	Nm
Output shaft design	Flange	

Supported motors	
Motor types	TGN6, TGT6
Clamping diameter	48 mm
Input flange	Motor adaptation - 2 part, round universal flange
Installation position	Any

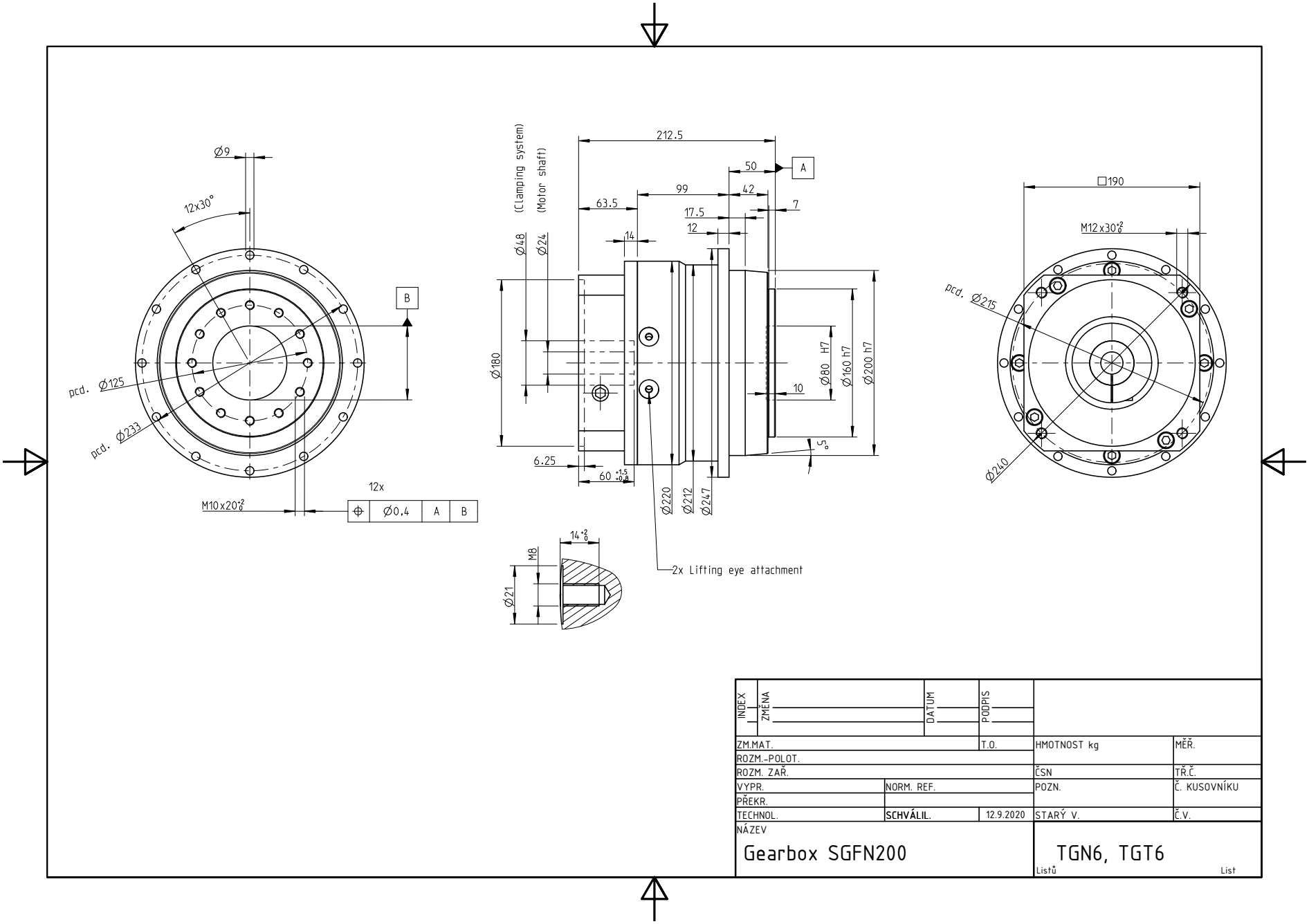
Ø9
12x30°
B
pcd. Ø125
pcd. Ø233
M10x20
12x
Ø0.4
A
B
(Clamping system)
(Motor shaft)
212.5
50
A
99
42
63.5
17.5
7
12
14
Ø48
Ø24
Ø180
Ø80 H7
Ø160 h7
Ø200 h7
10
5°
6.25
60
Ø220
Ø212
Ø247
2x Lifting eye attachment
14
M8
Ø21
□190
M12x30
pcd. Ø215
Ø240
INDEX
ZMĚNA
DATUM
PODPIS
ZM.MAT.
T.O.
HMOTNOST kg
MĚŘ.
ROZM.-POLOT.
ROZM. ZAŘ.
ČSN
TŘ.Č.
VYPR.
NORM. REF.
POZN.
Č. KUSOVNÍKU
PŘEKR.
TECHNOL.
SCHVÁLIL.
12.9.2020
STARÝ V.
Č.V.
NÁZEV
Gearbox SGFN200
TGN6, TGT6
Listů
List