Engineering data		
Ratio	25	
Number of stages	2	
Rated output torque	130	Nm
Cycling output torque	260	Nm
Max output torque	415	Nm
Emergency output torque	650	Nm
Rated input speed	4000	rpm
Max input speed	10000	rpm
Efficiency*	95	%
Operating temperature	<-25; 90>	°C
Backlash	< 1	arcmin
Service life	20000	h
Running noise	65	dB(A)
Torsional stiffness	75.00	Nm/arcmin

** at rated speed & torque*

Lubrication	
Type	Standard
Lubricant	Castrol Optigear Synthetic 800/150

Customs info	
HS Code	84834090

Mechanical data		
Radial force for 20'000h	4900	N
Radial force for 30'000h	4350	N
Max. radial force	4900	N
Axial force for 20'000h	9500	N
Axial force for 30'000h	8400	N
Max. axial force	9500	N
Protection	IP65	
Input inertia	2.02	kgcm2
Mass	6.81	kg
Tilting moment for 20'000h	475	Nm
Tilting moment for 30'000h	422	Nm
Max. bending moment	38	Nm
Output shaft design	Flange	

Supported motors	
Motor types	TGN6, TGT6
Clamping diameter	24 mm
Input flange	Motor adaptation - 2 part, round universal flange
Installation position	Any

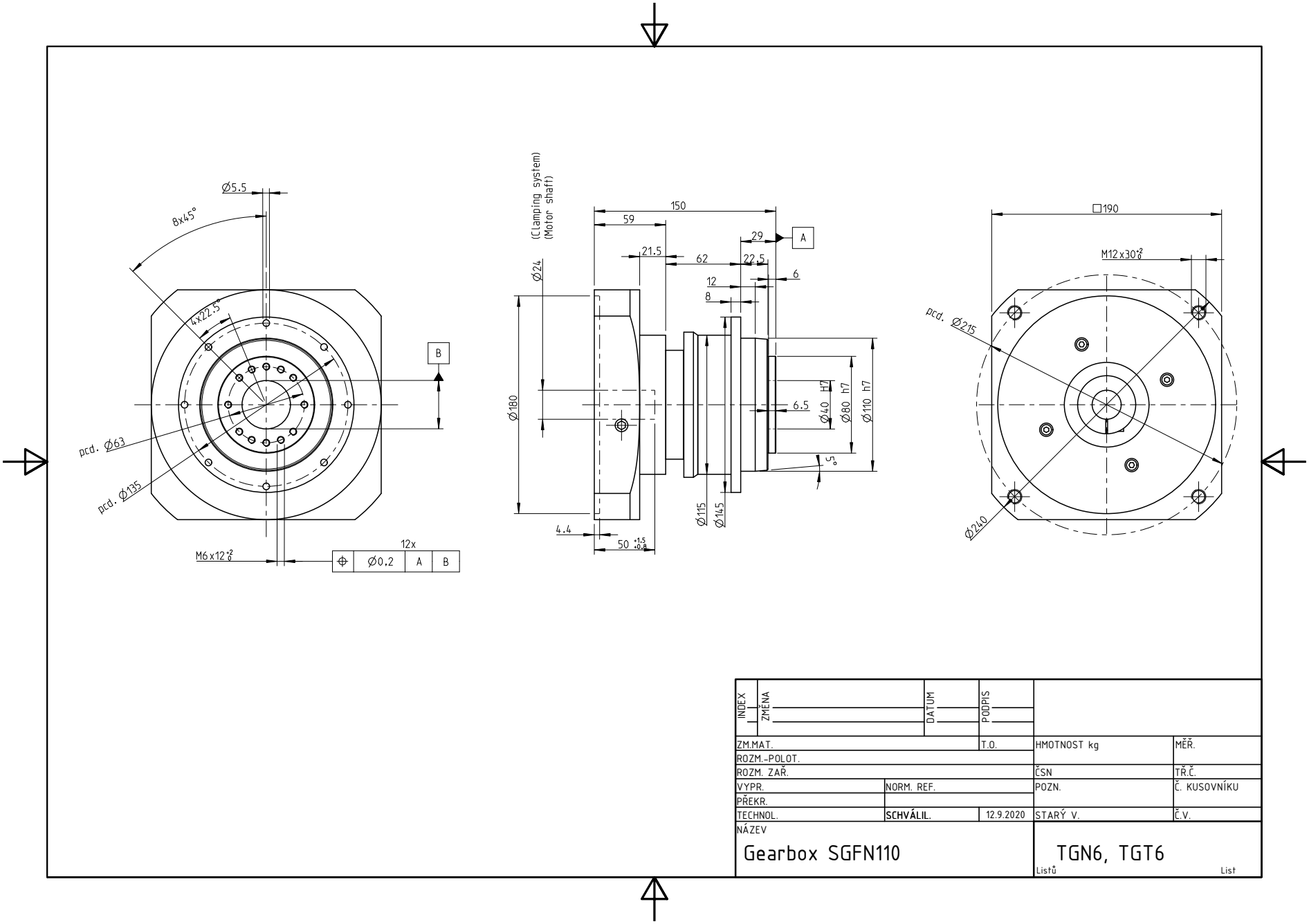

INDEX	ZMĚNA	DATUM	PODPIS	

ZM.MAT.		T.O.	HMOTNOST kg	MĚŘ.
ROZM.-POLOT.				
ROZM. ZAŘ.			ČSN	TŘ.Č.
VYPR.	NORM. REF.		POZN.	Č. KUSOVNÍKU
PŘEKR.				
TECHNOL.	**SCHVÁLIL.**	12.9.2020	STARÝ V.	Č.V.

NÁZEV

Gearbox SGFN110

TGN6, TGT6

Listů List