Engineering data		
Ratio	8	
Number of stages	1	
Rated output torque	225	Nm
Cycling output torque	450	Nm
Max output torque	560	Nm
Emergency output torque	970	Nm
Rated input speed	1650	rpm
Max input speed	6500	rpm
Efficiency	96	%*
Operating temperature	<-25; 90>	°C
Backlash	< 1	arcmin
Service life	20000	h
Running noise	70	dB(A)
Torsional stiffness	211.00	Nm/arcmin

** at rated speed & torque*

Mechanical data		
Radial force for 20'000h	12000	N
Radial force for 30'000h	11000	N
Max. radial force	12000	N
Axial force for 20'000h	8500	N
Axial force for 30'000h	7500	N
Max. axial force	8500	N
Protection	IP65	
Input inertia	7.81	kgcm2
Mass	12.94	kg
Tilting moment for 20'000h	1219	Nm
Tilting moment for 30'000h	1117	Nm
Max. bending moment	180	Nm
Output shaft design	Flange with dowel hole	

Lubrication	
Type	Standard
Lubricant	Castrol Optigear Synthetic 800/150

Customs info	
HS Code	84834090

Supported motors		
Motor types	TGN6, TGT6	
Clamping diameter	35	mm
Input flange	Motor adaptation - 2 part, square universal flange	
Installation position	Any	

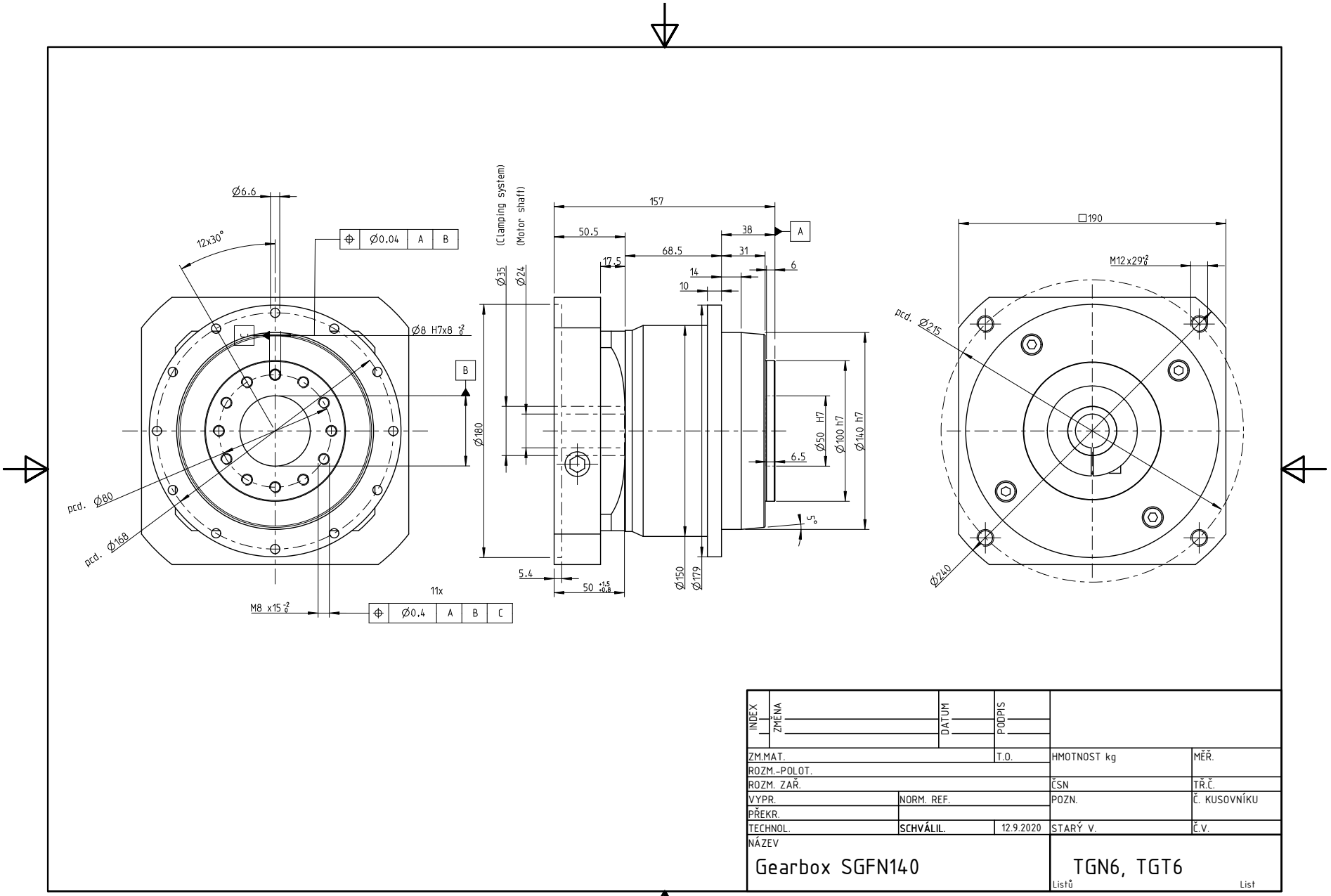

INDEX	ZMĚNA	DATUM	PODPIS		
ZM.MAT.			T.O.	HMOTNOST kg	MĚŘ.
ROZM.-POLOT.					
ROZM. ZAŘ.				ČSN	TŘ.Č.
VYPR.	NORM. REF.			POZN.	Č. KUSOVNÍKU
PŘEKR.					
TECHNOL.	**SCHVÁLIL.**	12.9.2020		STARÝ V.	Č.V.
NÁZEV					
Gearbox SGFN140				TGN6, TGT6	
				Listů	List